RoHS 客户图

REV.	ECN NO.	LOCATIONS	DESCRIPTION	DATE	DESIGN
A3	ECN20160120003	1/A3	修改XFLY003-UCAF004-1的脚位尺寸	2016.01.20	王 冠
B1	ECN20160811002	1/B1	整理图面，料号更新	2016.08.11	雷永健

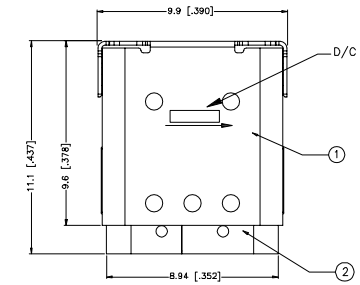

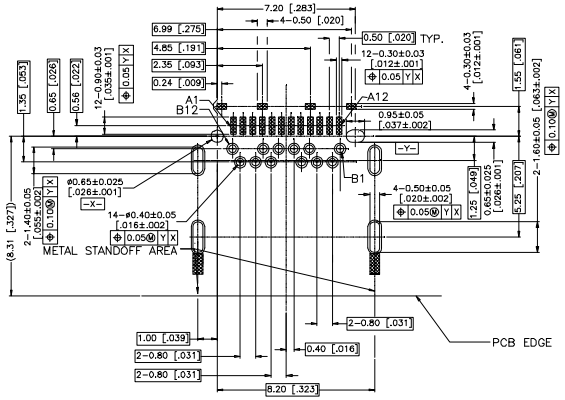

RECOMMENDED P.C.B LAYOUT (COMPONENT SIDE)

PCB THICKNESS: 1.60±0.05[.063±.002]mm

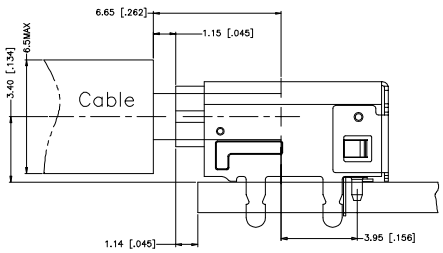

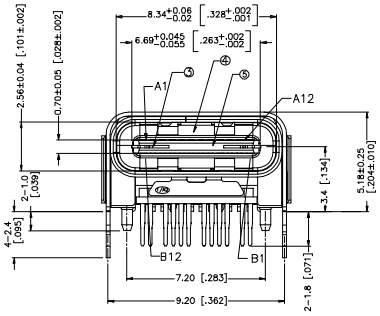

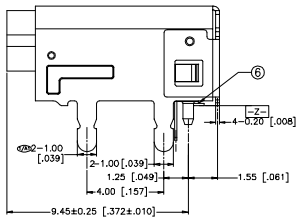

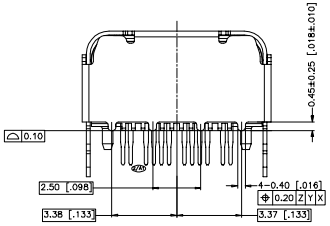

NOTES :

1. ELECTRICAL CHARACTERISTIC:
   - 1-1: CONTACT CURRENT RATING: VBUS AND GND CONTACTS RATED AT 1.25A EA., PARALLELED FOR A TOTAL OF 5A.
   - 1-2: LOW LEVEL CONTACT RESISTANCE: 40 MILLIOHMS MAX. FOR VBUS ,GND AND OTHER CONTACTS. 50 MILLIOHMS MAX. AFTER ENVIRONMENT TEST.
   - 1-3: DIELECTRIC WITHSTANDING VOLTAGE: 100VAC (RMS)MIN.
   - 1-4: INSULATION RESISTANCE: 100 MEGOHMS MIN.
2. MECHANICAL CHARACTERISTIC:
   - 2-1: INSERTION FORCE: 5~20N .
   - 2-2: EXTRACTION FORCE: 8~20 N UP TO 1,000 MATING CYCLES, 6~20 N AFTER 1000 DURABILITY CYCLES.
   - 2-3: DURABILITY: 10000 CYCLES.
   - 2-4: OPERATING TEMPERATURE: -55°C ~ +85°C.
3. MEET USB TYPE C STANDARD SPECIFICATION.
4. DIMENSIONS ARE IN MILLIMETERS, BRACKETED DIMENSIONS ARE INCHES EQUIVALENTS.
5. RECOMMENED PROCESS: IR REFLOW 260°C, 10SECONDS.
6. THE CONNECTOR IS ROHS COMPLIANT.

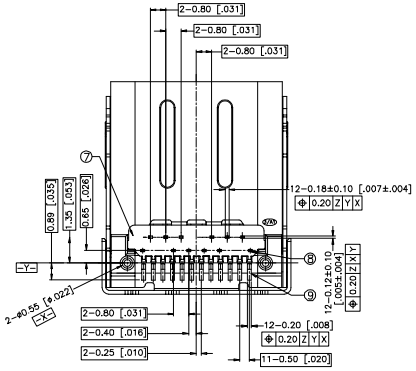

PIN ASSIGNMENT:

Pin No.	Signal Name	Pin No.	Signal Name
A1	GND	B12	GND
A2	SSTXp1	B11	SSRXp1
A3	SSTXn1	B10	SSRXn1
A4	VBUS	B9	VBUS
A5	CC1	B8	SBU2
A6	Dp1	B7	Dn2
A7	Dn1	B6	Dp2
A8	SBU1	B5	CC2
A9	VBUS	B4	VBUS
A10	SSRXn2	B3	SSTXn2
A11	SSRXp2	B2	SSTXp2
A12	GND	B1	GND

NO.	DESCRIPTION	QTY.	MATERIAL	TREATMENT
⑨	UPPER CONTACT	12	C18400 R480	NICKEL UNDERPLATING OVERALL; PALLADIUM/NICKEL +GOLD FLASH AT CONTACT AREA; LEAD FREE TIN ALLOY PLATED AT TERMINATION.
⑧	LOWER CONTACT	12		
⑦	LOWER IM	1	LCP UL 94V-0	MOLDED COLOR: BLACK.
⑥	UPPER IM	1	LCP UL 94V-0	MOLDED COLOR: BLACK.
⑤	CENTER IM	1	LCP UL 94V-0	MOLDED COLOR: BLACK.
④	EMC	1	SUS304-1/2H	CLEAN
③	SHIELD PLATE	1	SUS304-1/2H	NICKEL PLATING OVER ALL.
②	INNER SHELL	1	SUS304-1/2H	CLEAN
①	OUTER SHELL	1	SUS304-1/2H	NICKEL PLATING ONLY AT TAIL, Au AT TABS AND SOLDER TAIL.

产品图
PRODUCT CHART DWG

公差一览表
TOLERANCE UNLESS OTHERWISE

X.	±0.30	X°.	±5°
.X	±0.25	.X°	±2°
.XX	±0.30	.XX°	±1°
.XXX	±0.15	.XXX°	±0.5°

深圳市鑫风雷电子有限公司

单位 UNITS	MM	制图 DRAWING	王 冠	产品料号 PRODUCT PART NO.	25003-UCAF005-X
比例 SCALE	1:1	审核 CHKD	雷永健	产品名称 PRODUCT NO.	TYPE C母座24P板上前插后贴双壳 CH=3.4 L=11.1脚距4.0
日期 DATE	2009/10/20	核准 APPD	雷永健	角法 VIEW	版本 VER: A0

THIS DRAWING IS THE PROPERTY OF XINFENGLEI ELECTRONIC CO.,LTD.AND SHOULD NOT BE USED WITHOUT WRITTEN PERMISSION

由 Autodesk 教育版产品制作