RoHS 客户图

目錄 MAPX	设变内容 MODIFICATION	日期 DATE
A0	NEW	09-10-20

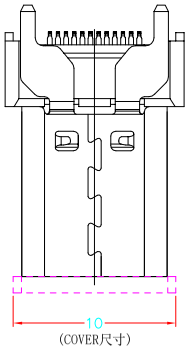

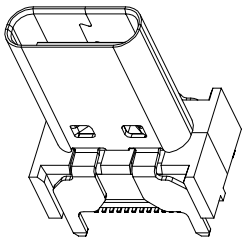

WITHOUT COVER

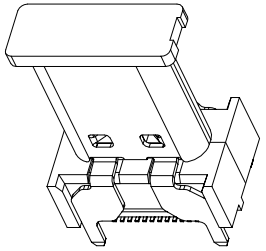

WITH COVER

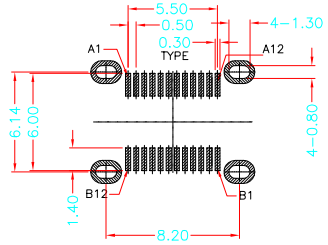

RECOMMEND P.C.B LAYOUT(COMPONENT SIDE)

TOLERANCE FOR PCB LAYOUT IS ± 0.05

KEEP OUT AREA

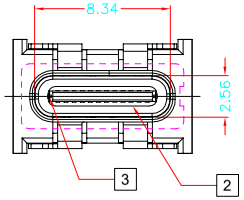

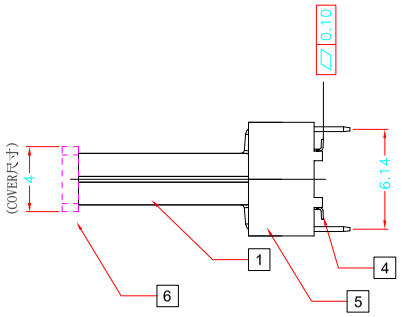

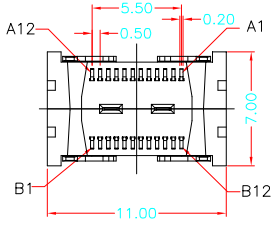

1.Contact Resistance:40mOHM Max.;
2.Dielectric Withstanding Voltage:100V AC For 1 Minute;
3.Insulation Resistance:100M OHM Min.;
4.Mating And Unmating Force:
Mating Force: 5~20N
Unmating Force: 8~20N(0~1000cycle);
6~20N(1001~10000cycle);
5.Durability:10000 Cycles;

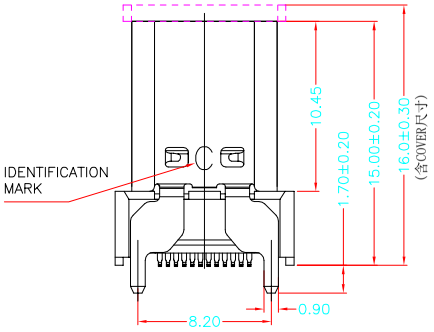

PIN	Signal Name	Description	PIN	Signal Name	Description
A1	GND	Ground return	B12	GND	Ground return
A2	SSTXp1	Positive half of first SuperSpeed TX differential pair	B11	SSRXp1	Positive half of first SuperSpeed RX differential pair
A3	SSTXn1	Negative half of first SuperSpeed TX differential pair	B10	SSRXn1	Negative half of first SuperSpeed RX differential pair
A4	VBUS	Bus Power	B9	VBUS	Bus Power
A5	CC1	Configuration Channel	B8	SBU2	Sideband Use (SBU)
A6	Dp1	Positive half of the USB 2.0 differential pair-Position 1	B7	Dn2	Negative half of the USB 2.0 differential pair-Position 2
A7	Dn1	Negative half of the USB 2.0 differential pair-Position 1	B6	Dp2	Positive half of the USB 2.0 differential pair-Position 2
A8	SBU1	Sideband Use(SBU)	B5	CC2	Configuraation Channel
A9	VBUS	Bus Power	B4	VBUS	Bus Power
A10	SSRXn2	Negative half of second SuperSpeed RX differential pair	B3	SSTXn2	Negative half of second SuperSpeed TX differential pair
A11	SSRXp2	Positive half of second SuperSpeed RX differential pair	B2	SSTXp2	Positive half of second SuperSpeed TX differential pair
A12	GND	Ground return	B1	GND	Ground return

Item	Title	Material	Dispose	Remark
1	Shell	Stainless Steel	Ni:30u" Min.	
2	GND Plate	Stainless Steel		
3	Mid Plate	Stainless Steel	Solder Tails: Matt Tin	
4	Top Contact	Copper Alloy	Mating Area: See P/N	
5	Bottom Contact	Copper Alloy	Solder Tails: Matt Tin	
6	Insulator	High Temperature Plastic	UL 94V-0	Black

产品图 PRODUCT CHART DWG

公差一览表 TOLERANCE UNLESS OTHERWISE

X.	±0.30	X°.	±5°
.X	±0.25	.X°	±2°
.XX	±0.20	.XX°	±1°
.XXX	±0.15	.XXX°	±0.5°

深圳市鑫风雷电子有限公司

单位 UNITS	MM	制图 DRAWING	王 冠	产品料号 PRODUCT PART NO.	19011-UCAF003-X
比例 SCALE	1:1	审核 CHKD	雷永健	产品名称 PRODUCT NO.	TYPE C 24P母座180度SMT H=15.0
日期 DATE	2009/10/20	核准 APPD	雷永健	角法 VIEW	版本 VER A0

由 Autodesk 教育版产品制作

THIS DRAWING IS PROPRIETARY TO XINFENGLEI ELECTRONIC CO.,LTD.AND SHOULD NOT BE USED WITHOUT WRITTEN PERMISSION

RoHS 客户图

目錄 MAPX	设变内容 MODIFICATION	日期 DATE
A0	NEW	09-10-20

包装规范说明:

1. 如图所示首先CARRIER TAPE（载带）需先预留8PCS空格后方可置入成品,并附COVER TPAE(上带)覆盖于上,再配合带装机自动卷绕于REEL(塑胶卷轴)收料.
As shown from picture, the initial starting carrier need to be emptied for 8 pcs, then put connector on Inth carrier; Then cover it with Cover Tape, and Reeling it with Reel auto machine .
2. 在定量包装完成后,前端CARRIER TAPE亦需预留8PCS空格,而COVER TPAE配合CARRIER TYPE长度覆盖后,并须再超出200mm以上,最后以唛拉贴固,并于REEL盘上方贴合格标签和ROHS标签各一张.
In the end of the Reel, need to empty 8 pcs carrier tape; After covering the carrier, then the Cover Tape need to be 200mm longer, and use tape to fix the cover tape to the reel. Put "RoHS label" and "Qualified Label" on the tape.
3. 注意:COVER TAPE不可浮起或有贴附不顺,歪斜及成品放置方向错误之现象.
Attention: no deformation of Cover Tape is allowed (protruded plastic, or not smooth, bednt or product is wrong positioned)
4. 在纸箱内左右,前后侧各放入一块三角卡板,每个PE袋中装入8个REEL盘,并在PE袋中放入2PCS干燥剂,用胶带封好.在每个纸箱内装入10PCS卷盘,共1叠.盖上箱盖后以胶带封箱,于侧位置贴出货标签和RoHS标签各一张.
Inside of carton, at left and right side, put triangle fixed card; Put 10Reels to PE bag, and put 1 bags of desiccant inside the PE bag. Each carton has 8 reels. Put "RoHS label" and "Delivery label" on side of the carton.
5. 零箱部分，出货时须用缓冲物填满.
The fractional box must be filled by cushion before shipment.

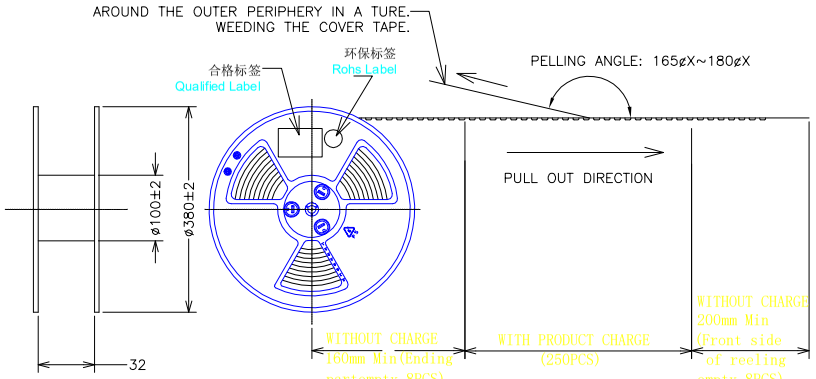

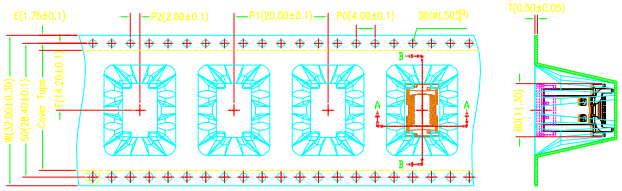

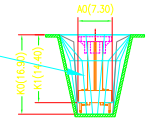

产品放置载带中时，铆合面方向可以不一致！！

RoHS

环保标签(ø25MM)
Rohs Label

产品规格 Product spc.		/
包装容量 QTY	个/卷 Pcs/Reel	200
	卷/箱 Reel/Ctos.	8
	个/箱 Pcs/Ctos.	1600
重量 Weight (Kg)	净重 N. W.	/kg
	毛重 G. W.	/kg

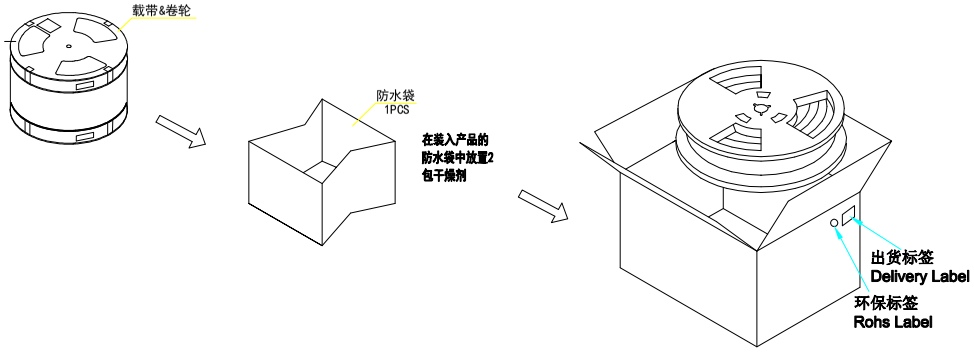

产品图 PRODUCT CHART DWG				深圳市鑫风雷电子有限公司			
公差一览表 TOLERANCE UNLESS OTHERWISE				单位 UNITS	MM	制图 DRAWING	王 冠
X.	±0.30	X'.	±5'	比例 SCALE	1:1	审核 CHKD	雷永健
.X	±0.25	.X'	±2'	日期 DATE	2009/10/20	核准 APPD	雷永健
.XX	±0.20	.XX'	±1'				
.XXX	±0.15	.XXX'	±0.5'				

产品料号 PRODUCT PART NO.	19011-UCAF003-X
产品名称 PRODUCT NO.	TYPE C 24P母座180度SMT H=15.0
角法 VIEW	版本 VER: A0

THIS DRAWING IS THE PROPRIETARY TO XINFENGLEI ELECTRONIC CO.,LTD.AND SHOULD NOT BE USED WITHOUT WRITTEN PERMISSION

由 Autodesk 教育版产品制作