RoHS 客户图

目錄 MAPX	设变内容 MODIFICATION	日期 DATE
A0	NEW	09-10-20

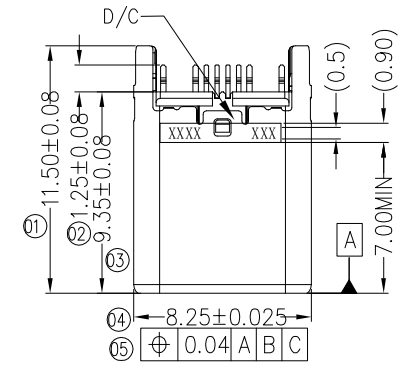

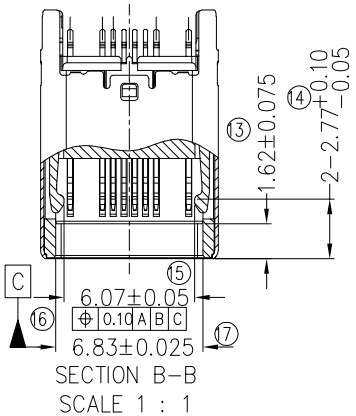

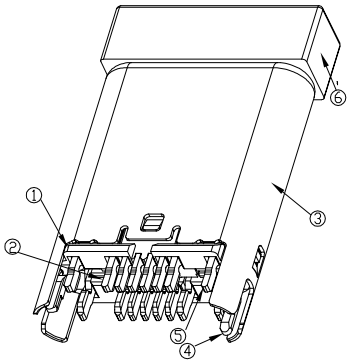

Note:

1. Mechanical Characteristics

1-1 Durability: 10000 cycles

1-2 Insertion Force : 6 ~ 20 N ;Extraction Force : 8 ~ 20N

Durability After Insertion Force : 5 ~ 20 N ;Extraction Force : 6 ~ 20N

1-3 Vibration : No discontinuities greater than 10μsec.

2. Electrical Characteristics

2-1 LLCR: 30mΩ (initial) Δ10 mΩ (after)

2-2 Insulation Resistance : 1000MΩ Min.

2-3 Withstanding Strength:100V AC FOR 1 MINUTE

2-4 High current: 6A current shuld be applied to Vbus pins

3. Environment characteristic:

3-1 Heat resistance: +85 °C±2 ℃ 96hours.

3-2 Cold resistance: -40 °C±2 ℃ 96hours.

3-3 Thermal shock:And the temperature impact is:

-55°C±2 ℃~+85 °C±2 ℃ DEG C, the holding time is 30 minutes, the conversion time is 5 minutes, and 5 cycles are carried out.

3-4 Humidity temperature: 40±2 ℃, 90~95%R.H 96hours

3-5 Salt spray: 35±2°C 95 ~ 98% (R.H.) , PH: 6.5 ~ 7.2, 72 hours Terminal;

4.All materal must be meet ROHS 2.0&HF

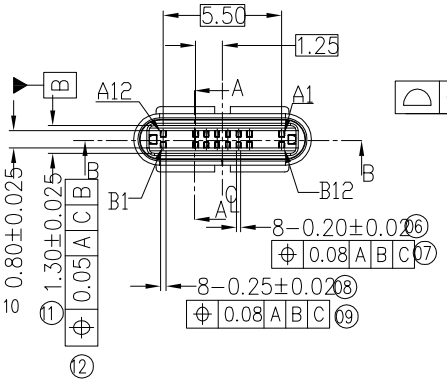

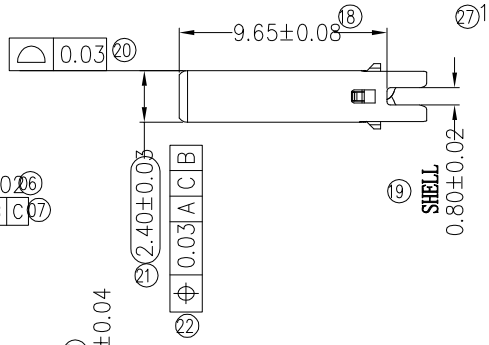

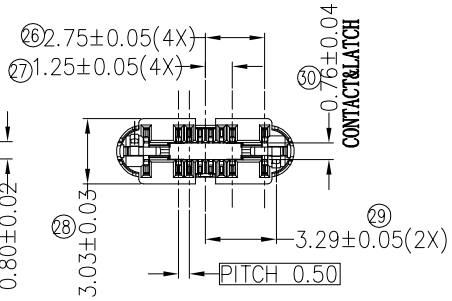

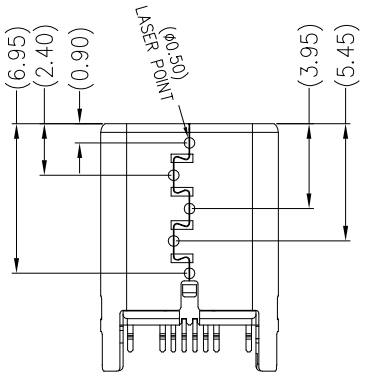

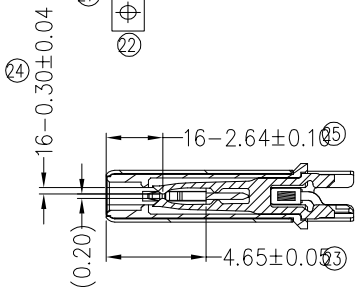

PIN NO.	Signal Name	PIN NO.	Signal Name
A1	GND	B12	GND
A2		B11	
A3		B10	
A4	VBUS	B9	VBUS
A5	CC	B8	VCONN
A6	D+	B7	D-
A7	D-	B6	D+
A8	SBU1	B5	SBU2
A9	VBUS	B4	VBUS
A10		B3	
A11		B2	
A12	GND	B1	GND

ITEM	PART NAME	DESCRIPTION	Q'TY.
1	HOSING	HIGH TEMPERATRUL PALSTIC PA9T	1PCS
2	TERMINAL	COPPER ALLOY C7025-TM03 OVER ALL: 80u" Ni PLATING CONTACT AREA: 25u"Min PD/Ni PLATING 5u"Min Au PLATING EXPOSURE AREA: 5u"Min PD/Ni PLATING SOLDER TAIL: 100-200u" Sn PLATING	12PCS
3	SHELL	SUS304-1/2H,Plating:Ni 50u"MIN	1PCS
4	LATCH	SUS301-H,Plating:Ni 50u"MIN	1PCS
5	I/M LATCH	HIGH TEMPERATRUL PALSTIC PA 9T	1PCS
6	COVER	HIGH TEMPERATRUL PALSTIC LCP E130i	1PCS

产品图 PRODUCT CHART DWG

公差一览表 TOLERANCE UNLESS OTHERWISE

X.	±0.30	X°	±5°
.X	±0.25	.X°	±2°
.XX	±0.30	.XX°	±1°
.XXX	±0.15	.XXX°	±0.5°

深圳市鑫风雷电子有限公司

单位 UNITS	MM	制图 DRAWING	王 冠	产品料号 PRODUCT PART NO.	25021-UCAM001-X
比例 SCALE	1:1	审核 CHKD	雷永健	产品名称 PRODUCT NO.	TYPE C 16P公头夹板（小米专用）
日期 DATE	2009/10/20	核准 APPD	雷永健	角法 VIEW	版本 VER: A0

THIS DRAWING AND DESIGN IS PROPRIETARY TO XINFENGLEI ELECTRONIC CO.,LTD.AND SHOULD NOT BE USED WITHOUT WRITTEN PERMISSION

由 Autodesk 教育版产品制作