RoHS 客户图

目錄 MAPX	设变内容 MODIFICATION	日期 DATE
A0	NEW	09-10-20

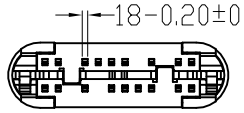

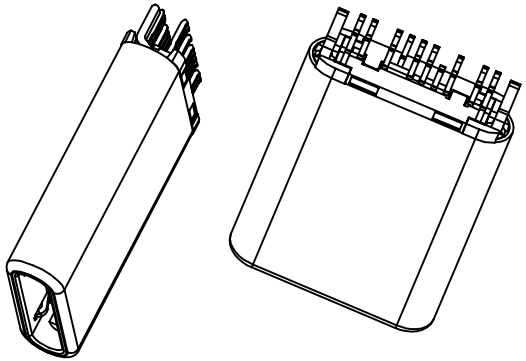

NOTES:

1.MATERIAL:
MOLDING: LCP
HOUSING: LCP
CONTACT:COPPER ALLOY. T=0.20±0.01mm
GOLD PLATED 3~5u" Min ON CONTACT AREA,
80u'' Min TIN (LEAD FREE) ON SOLDER AREA,
SHELL: SUS
50u" NICKEL PLATING OVER ALL.
LATCH:SUS301-H,T=0.30mm

2.MECHANICAL:
INSERTION: 2.5kgf Max.
EXTRACTION: 1kgf Min.
DURABILITY: 10000 CYCLES

3.ELECTRICAL:
CURRENT: 5A MIN FOR VBUS;
0.25A MIN FOR OTHER.
VOLTAGE: 5VAC MAX
WITHSTANDING VOLTAGE: 100V AC.
CONTACT RESISTANCE: 30mΩ MAX.
INSULATION RESISTANCE: 100MΩ MIN.

4.ENVIRONMENTAL
TEMPERATURE RANGE -55°C ~ +85°C

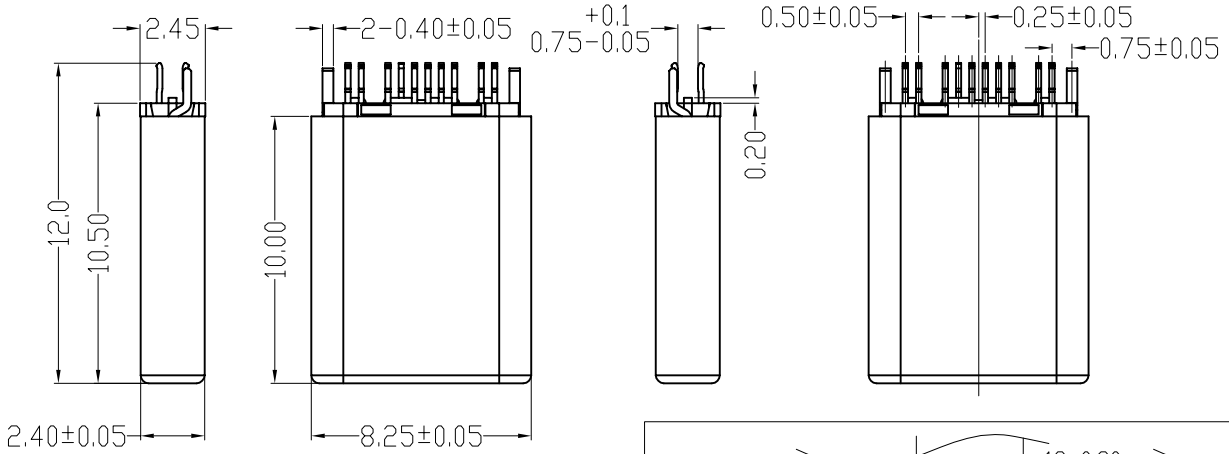

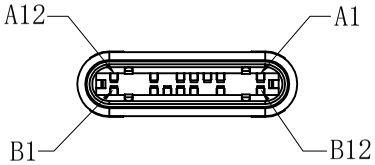

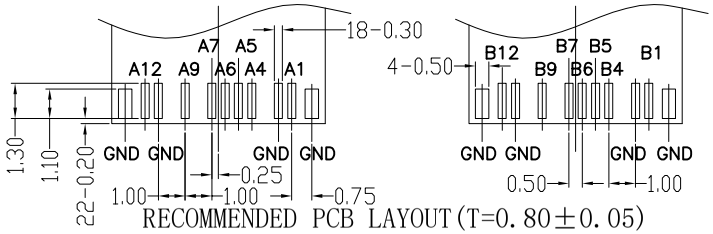

RECOMMENDED PCB LAYOUT (T=0.80±0.05)
COMPONENT SIDE (GENERAL TOLERANCE: ±0.05)

PIN	SIGNAL NAME	PIN	SIGNAL NAME
A1	GND	B12	GND
A4	VBUS	B9	VBUS
A5	CC1		
A6	DP1	B7	DN2
A7	DN1	B6	DP2
		B5	CC2
A9	VBUS	B4	VBUS
A12	GND	B1	GND

产品图
PRODUCT CHART DWG

公差一览表
TOLERANCE UNLESS OTHERWISE

X.	±0.30	X°	±5°
.X	±0.25	.X°	±2°
.XX	±0.20	.XX°	±1°
.XXX	±0.15	.XXX°	±0.5°

深圳市鑫风雷电子有限公司

单位 UNITS	MM	制图 DRAWING	王 冠	产品料号 PRODUCT PART NO.	20006-UCAM003-X
比例 SCALE	1:1	审核 CHKD	雷永健	产品名称 PRODUCT NO.	TYPE C 14P公头拉伸式不带板苹果款
日期 DATE	2009/10/20	核准 APPD	雷永健	角法 VIEW	版本 VER A0

THIS DRAWING AND INFORMATION THEREIN IS PROPRIETARY TO XINFENGLEI ELECTRONIC CO.,LTD.AND SHOULD NOT BE USED WITHOUT WRITTEN PERMISSION

由 Autodesk 教育版产品制作