RoHS 客户图

目錄 MAPX	设变内容 MODIFICATION	日期 DATE
A0	NEW	09-10-20

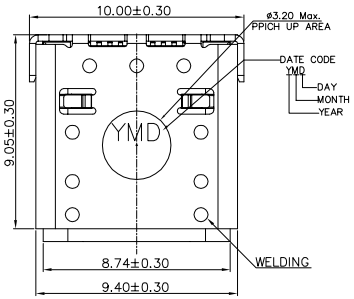

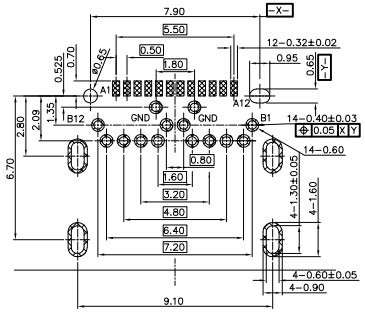

RECOMMENDED PCB LAYOUT(TOP VIEW)
(TOLERANCE=±0.05mm)

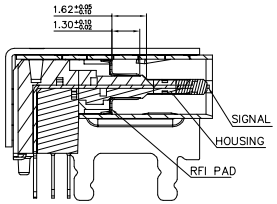

SECTION A-A

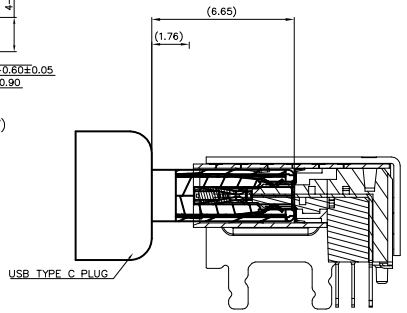

PLUG INSERTION DEPTH

NOTES:
1. MATERIAL:
   1.1 OUTSIDE SHELL: STAINLESS STEEL T=0.25mm
   1.2 INNER SHELL: STAINLESS STEEL T=0.20mm
   1.3 SIGNAL: STAINLESS STEEL T=0.10mm
   1.4 RFI PAD: STAINLESS STEEL T=0.08mm
   1.5 HOUSING: HIGH TEMPERATURE THERMOPLASTIC UL94V-0
   1.6 TEMINARL: COPPER ALLOY T=0.12mm
2. PLATING:
   2.1 TERMINAL: SEE PIN
   2.2 SHELL: NICKEL PLATED 60u"MIN.
3.ELECTRICAL CHARACTERISTICS:
   3.1 CURRENT RATING: 5.0 A
       VOLTAGE RATING: 20.0 V
   3.2 LLCR: VBUS& GND PINS: 40mΩ/PIN MAX
       OTHER PINS : 40mΩ/PIN MAX
       LLCR MAX. CHANGE OF ALL PINS: 10mΩ
   3.3 INSULATION RESISTANCE: 100MΩ MIN.
4.MECHANICAL CHARACTERISTICS:
   4.1 INSERTION FORCE: 0.5~2.0kg.
   4.2 WITHDRAWAL FORCE: 0.8~2.0kg.(INTITIAL) 0.6~2.0kg.(AFTER LIFE TEST)
5.LIFE TEST: 10000 CYCLES MIN

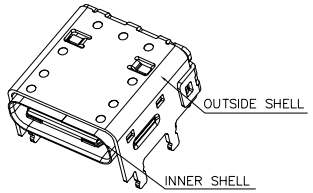

3D VIEW

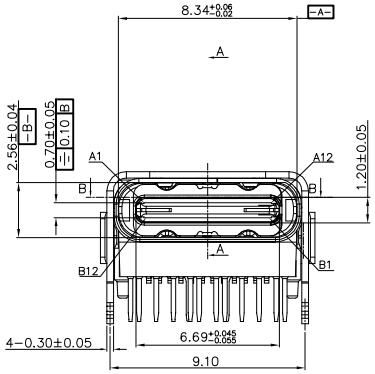

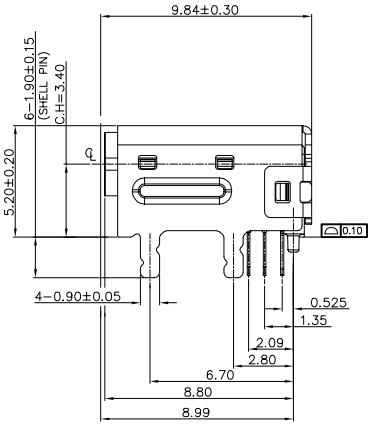

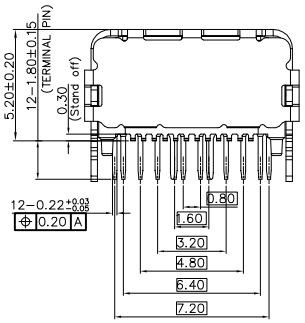

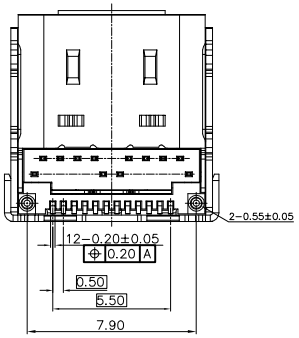

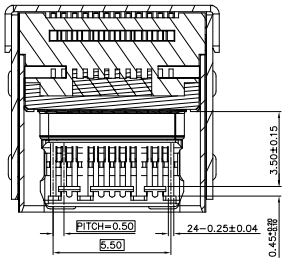

SECTION B-B

PIN	Signal Name	Description	PIN	Signal Name	Description
A1	GND	Ground return	B12	GND	Ground return
A2	SSTXp1	Positive half of first SuperSpeed TX differential pair	B11	SSRXp1	Positive half of first SuperSpeed RX differential pair
A3	SSTXn1	Negative half of first SuperSpeed TX differential pair	B10	SSRXn1	Negative half of first SuperSpeed RX differential pair
A4	VBUS	Bus Power	B9	VBUS	Bus Power
A5	CC1	Configuration Channel	B8	SBU2	Sideband Use (SBU)
A6	Dp1	Positive half of the USB 2.0 differential pair-Position 1	B7	Dn2	Negative half of the USB 2.0 differential pair-Position 2
A7	Dn1	Negative half of the USB 2.0 differential pair-Position 1	B6	Dp2	Positive half of the USB 2.0 differential pair-Position 2
A8	SBU1	Sideband Use(SBU)	B5	CC2	Configuraation Channel
A9	VBUS	Bus Power	B4	VBUS	Bus Power
A10	SSRXn2	Negative half of second SuperSpeed RX differential pair	B3	SSTXn2	Negative half of second SuperSpeed TX differential pair
A11	SSRXp2	Positive half of second SuperSpeed RX differential pair	B2	SSTXp2	Positive half of second SuperSpeed TX differential pair
A12	GND	Ground return	B1	GND	Ground return

产品图
PRODUCT CHART DWG

公差一览表
TOLERANCE UNLESS OTHERWISE

X.	±0.30	X°.	±5°
.X	±0.25	.X°	±2°
.XX	±0.30	.XX°	±1°
.XXX	±0.15	.XXX°	±0.5°

深圳市鑫风雷电子有限公司

单位 UNITS	MM	制图 DRAWING	王 冠	产品料号 PRODUCT PART NO.	01003-UCAF008-B
比例 SCALE	1:1	审核 CHKD	雷永健	产品名称 PRODUCT NO.	TYPE C 24P母座板上型CH=3.4长脚
日期 DATE	2009/10/20	核准 APPD	雷永健	角法 VIEW	版本 VER: A0

THIS DRAWING CONTAINS INFORMATION THAT IS PROPRIETARY TO XINFENGLEI ELECTRONIC CO.,LTD.AND SHOULD NOT BE USED WITHOUT WRITTEN PERMISSION

由 Autodesk 教育版产品制作