RoHS 客户图

目錄 MAPX	设变内容 MODIFICATION	日期 DATE
A0	NEW	09-10-20

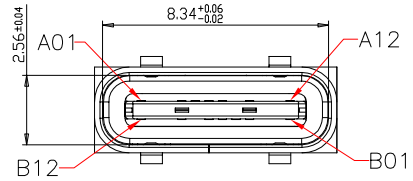

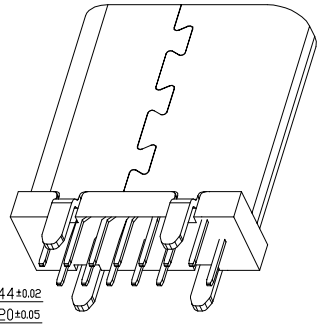

SPECIFICATIONS:
1. ELECTRICAL CHARACTERISTICS:
   1-1. CONTACT RESISTANCE: 30mΩ MAX.
   1-2. DIELECTRIC WITHSTANDING VOLTAGE: 100V AC FOR ONE MINUTE.
   1-3. INSULATION RESISTANCE: 100MΩ MIN. MEASURED BY 500 VDC
2. MECHANICAL CHARACTERISTICS:
   2-1. INSERTION FORCE :0.5-2.0Kgf(REF.)
   2-2. WITHDRAWAL FORCE :0.8-2.0Kgf(REF.)
3. LIFE TEST: 10,000 CYCLES.
4. TO CONFORM TO THE KRCONN HAZARDOUS SUBSTANCE FREE SPEC.

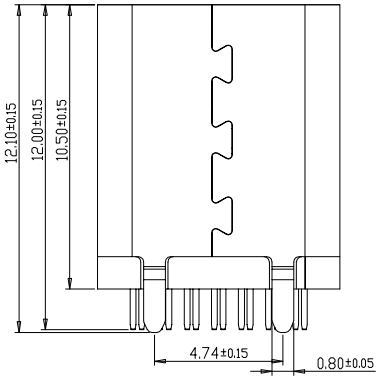

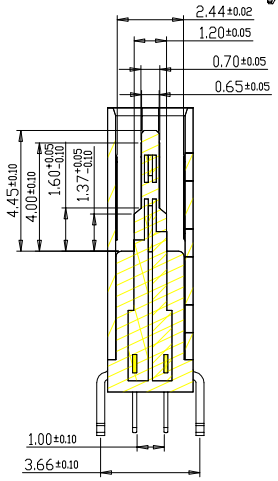

截面 1-1

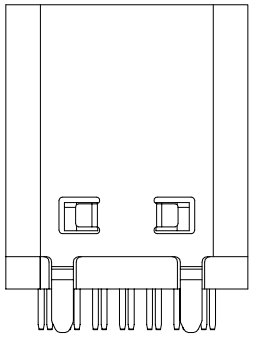

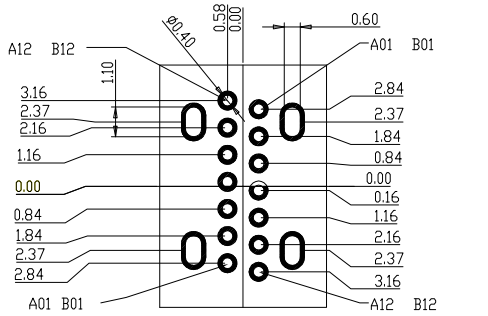

RECOMMENDED P.C.B. LAYOUT (T:1.00mm)
TOLERANCE UNSPECIFIED ±0.05mm

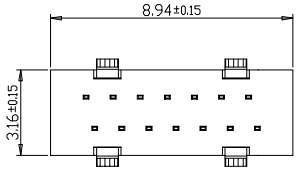

NO.	DESCRIPTION	MATERIAL	REMARKS	QTY
6	SHELL	STAINLESS STEEL	NI Plated	1PCS
5	SHIELDING PLATE	STAINLESS STEEL	---	1PCS
4	MD	HIGH TEMPERATURE PLASTIC	BLACK	1PCS
3	CONTACT	COPPER ALLOY	Au/NI Plated	1SET
2	CONTACT	COPPER ALLOY	Au/NI Plated	1SET
1	HOUSING	HIGH TEMPERATURE PLASTIC	BLACK	1PCS

PIN	SIGNAL NAME	PIN	SIGNAL NAME
A1	GND	B12	GND
A4	VBUS	B9	VBUS
A5	CC1		
A6	DP1	B7	DN2
A7	DN1	B6	DP2
		B5	CC2
A9	VBUS	B4	VBUS
A12	GND	B1	GND

产品图 PRODUCT CHART DWG

公差一览表 TOLERANCE UNLESS OTHERWISE

X.	±0.30	X°	±5°
.X	±0.25	.X°	±2°
.XX	±0.30	.XX°	±1°
.XXX	±0.15	.XXX°	±0.5°

深圳市鑫风雷电子有限公司

单位 UNITS	MM	制图 DRAWING	王 冠	产品料号 PRODUCT PART NO.	01012-UCAF003-A
比例 SCALE	1:1	审核 CHKD	雷永健	产品名称 PRODUCT NO.	TYPE C 14P母座180度 H=10.5
日期 DATE	2009/10/20	核准 APPD	雷永健	角法 VIEW	版本 VER A0

THIS DRAWING AND DESIGN THEREIN IS PROPRIETARY TO XINFENGLEI ELECTRONIC CO.,LTD.AND SHOULD NOT BE USED WITHOUT WRITTEN PERMISSION

由 Autodesk 教育版产品制作