RoHS 客户图

目錄 MAPX	设变内容 MODIFICATION	日期 DATE
A0	NEW	09-10-20

NOTES:
SPECIFICATION:
1. CURRENT RATING: 5.0A MAX
2. VOLTAGE: 100 VAC
3. TEMPERATURE RANGE: -30 °C ~ 85 °C
4. CONTACT RESISTANCE: 40 MILLIONHM MAX
5. INSULATION RESISTANCE: 100 MEGOHMS MIN.
6. LNSERTION FORCE : 5N~20N
7. UNMATING FORCE: 8N~20N
8. DURABILITY: 10,000 CYCLES

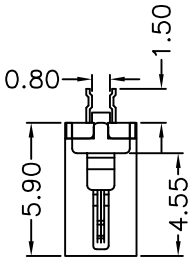

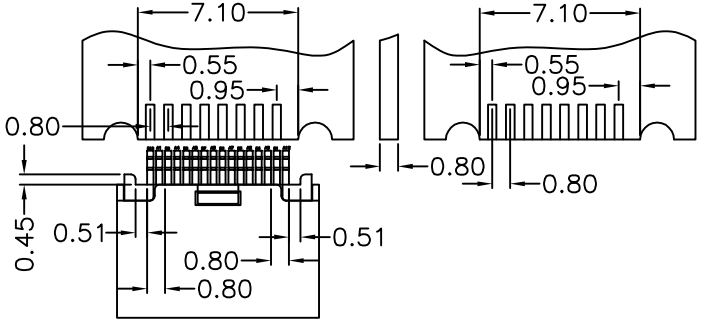

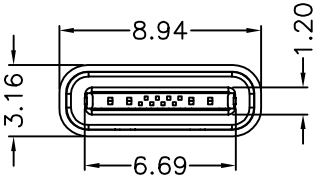

RECOMMENDED P.C.B. LAYOUT
TOLERANCE UNSPECIFIED ±0.05mm

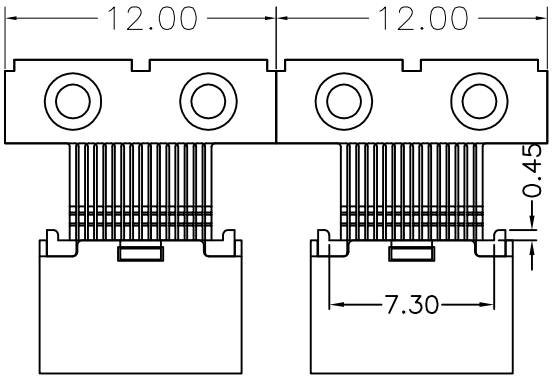

PIN	Signal Name	PIN	Signal Name
A1	GND	B12	GND
A2		B11	
A3		B10	
A4	VBUS	B9	VBUS
A5	CC1	B8	SUB2
A6	Dp1	B7	Dn2
A7	Dn1	B6	Dp2
A8	SUB1	B5	CC2
A9	VBUS	B4	VBUS
A10		B3	
A11		B2	
A12	GND	B1	GND

NO.	DESCRIPTION	MATERIAL	REMARKS	QTY
3	SHELL	STAINLESS STEEL	NI/SN Plated	1PCS
2	CONTACT	COPPER ALLOY	Au1u"/NI Plated	1SET
1	HOUSING	HIGH TEMPERATURE PLASTIC	BLACK	1PCS

产品图
PRODUCT CHART DWG

公差一览表
TOLERANCE UNLESS OTHERWISE

X.	±0.30	X°.	±5°
.X	±0.25	.X°	±2°
.XX	±0.30	.XX°	±1°
.XXX	±0.15	.XXX°	±0.5°

深圳市鑫风雷电子有限公司
Shenzhen xinfenglei Electronic Co., Ltd

单位 UNITS	MM	制图 DRAWING	王 冠	产品料号 PRODUCT PART NO.	19003-UCAF005-X
比例 SCALE	1:1	审核 CHKD	雷永健	产品名称 PRODUCT NO.	TYPE C 16P夹板母座短体L=5.9
日期 DATE	2009/10/20	核准 APPD	雷永健	角法 VIEW	版本 VER A0

THIS DRAWING CONTAINS INFORMATION THAT IS PROPRIETARY TO XINFENGLEI ELECTRONIC CO.,LTD.AND SHOULD NOT BE USED WITHOUT WRITTEN PERMISSION

由 Autodesk 教育版产品制作