RoHS 客户图

目錄 MAPX	设变内容 MODIFICATION	日期 DATE
A0	NEW	09-10-20

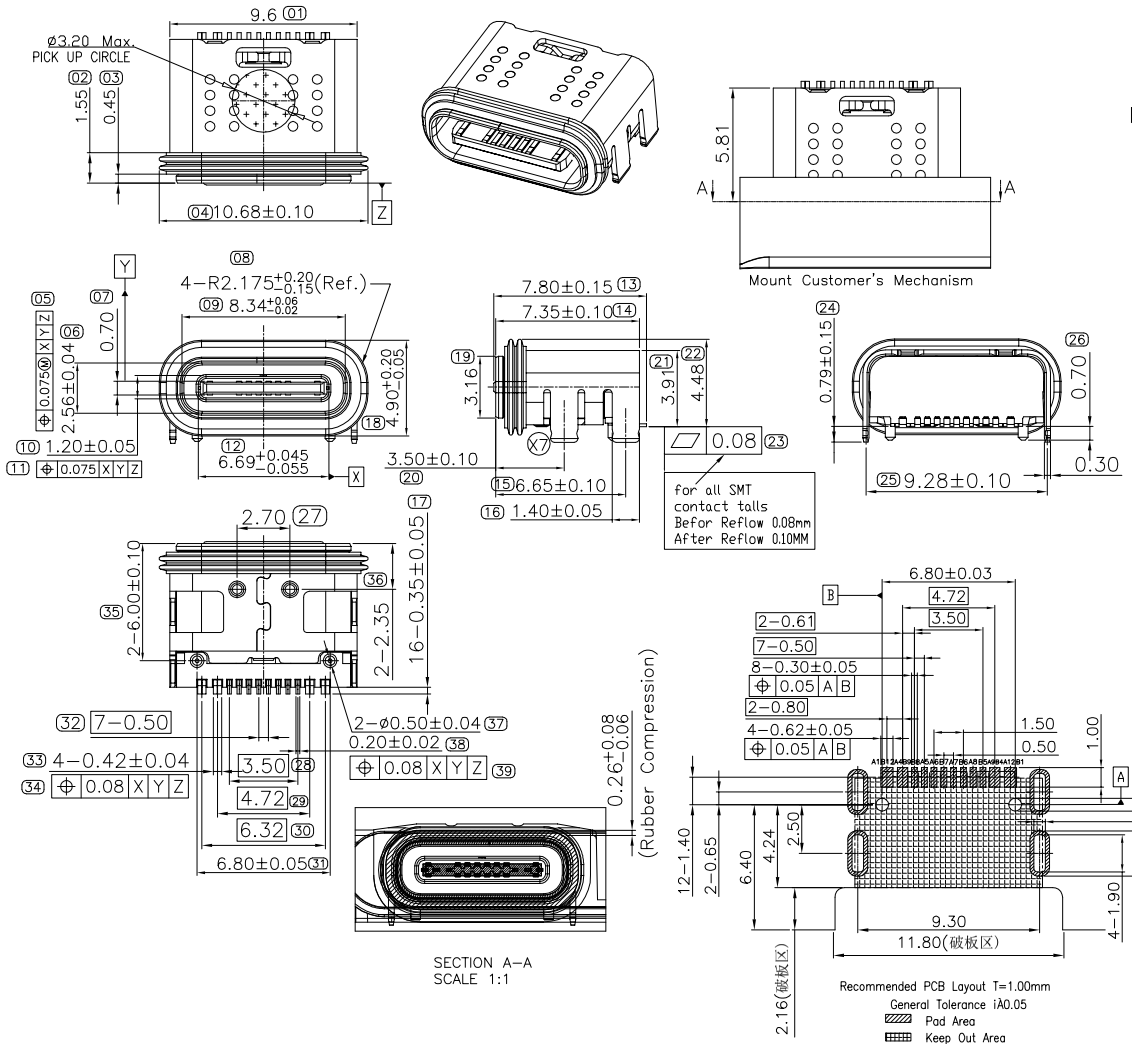

Note:

1. Material:
   - 1-1. Housing: Thormplastic, UL94-V0; Colour: Black.
   - 1-2. Terminal: Copper alloy, Contact: See table A.
   - 1-3. Shell & Solder: SUS, Plating: Ni.
2. Electrical Characteristics:
   - 2-1. Rating: GND: 5A, VBUS Total: 5A;
   - 2-2. Contact resistance: 40mΩMax.; After test add 10 m次Max.
   - 2-3. Electric Strength test: 500VAC, 0.1S, 0.5mA;
   - 2-4. Insulation test: 500VDC, 0.1S, 100MΩ;
3. Mechanical properties:
   - 3-1. Mating force: 5~20N:
   - 3-2. Unmating force: 8~20N(Initial), 6~20N(After Durability);
   - 3-3. Testing Speed: 200±50 Times/H, Test: 10000 times;
4. Environmental Characteristics: Oper.Temp.: -55℃~ +85℃;
5. Waterproof Rate: IPX4
6. Restriction of Hazardous Substances:
   Components be RoHS and HF compliant.

IP-X4

PIN DEFINE:

Pin	Signal Name	Description	Mating Sequence	Pin	Signal Name	Description	Mating Sequence
A1	GND	Ground return	First	A12	GND	Ground return	First
A4	VBUS	Bus Power	First	B9	VBUS	Bus Power	First
A5	CA1	Configuration Channel	Second	B8	SBU2	Sideband Use(SBU)	Second
A6	Dp1	Positive half of the USB 2.0 differential pair-Position 1	Second	B7	Dn2	Negative half of the USB 2.0 differential pair-Position 2	Second
A7	Dn1	Negative half of the USB 2.0 differential pair-Position 1	Second	B6	Dp2	Positive half of the USB 2.0 differential pair-Position 2	Second
A8	SBU1	Sideband Use(SBU)	Second	B5	CC2	Configuration Channel	Second
A9	VBUS	Bus Power	First	B4	VBUS	Bus Power	First
A12	GND	Ground return	First	A1	GND	Ground return	First

ITEM	PART NAME	MATERIAL	REMARK
10	GLUE	MT785	WHITE
9	Silicone rubber	RBB	RED
8	Silicone rubber	RBB	BLACK
7	Outer-shell	SUS304	Underplated:Ni 30u"Min.
6	Inner-shell	SUS304	Underplated:Ni 30u"Min.
5	2M	PA Black	UL94V-0
4	1M	PA Black	UL94V-0
3	Mid-plate	SUS301	Cleaned
2	Low contact	Copper Alloy	Underplated:Ni 50u"Min. Contact area:Au3u"Min. Solder tall:Au1Min.
1	Upper contact	Copper Alloy	

产品图 PRODUCT CHART DWG			
公差一览表 TOLERANCE UNLESS OTHERWISE			
X.	±0.30	X°.	±5°
.X	±0.25	.X°	±2°
.XX	±0.20	.XX°	±1°
.XXX	±0.15	.XXX°	±0.5°

深圳市鑫风雷电子有限公司
Shenzhen xinfenglei Electronics Co., Ltd

单位 UNITS	MM	制图 DRAWING	王冠 Wangguan	产品料号 PRODUCT PART NO.	20002-UCAF002-X
比例 SCALE	1:1	审核 CHKD	雷永健 Leiyongjian	产品名称 PRODUCT NO.	Type C 16p板上防水 L=7.35
日期 DATE	2009/10/20	核准 APPD	雷永健 Leiyongjian	联系方式 Mailbox/web	mailbox: sale1@xflconn.com www.xflconn.com

THIS DRAWING IS THE PROPRIETARY TO XINFENGLEI ELECTRONIC CO.,LTD.AND SHOULD NOT BE USED WITHOUT WRITTEN PERMISSION

由 Autodesk 教育版产品制作