由 Autodesk 教育版产品制作

RoHS Compliant

客户图

目錄 MAPX	设变内容 MODIFICATION	日期 DATE
A0	NEW	09-10-20

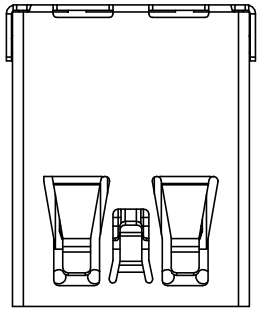

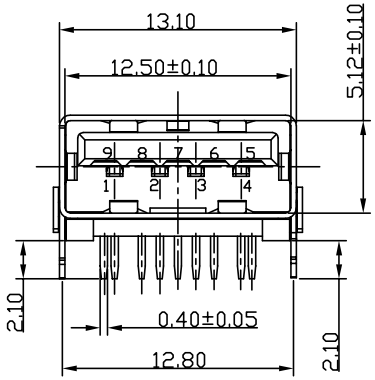

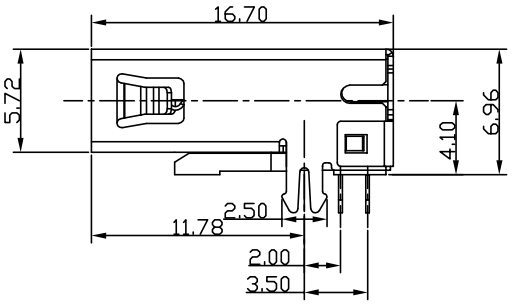

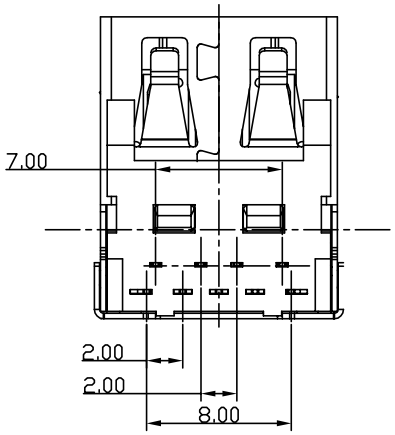

Pin NUMBER	SIGNAL NAME
1	VBUS
2	D-
3	D+
4	GND
5	StdA_SSRX-
6	StdA_SSRX+
7	GND_DRAIN
8	StdA_SSTX-
9	StdA_SSTX+
Shell	Shield

NOTE:
1. MATERIAL:
1.1 INSULATOR:HIGH TEMPERATURE PLASTIC
1.2 CONTACT:BRONZE
1.3 SHELL:BRASS
2. ELECTRICAL CHARACTERISTICS;
2.1 CONTACTRESISTANCE:30mΩ MAX
2.2 CONTACT CURRENT RATING:1.5A
2.3 DIELECTRIC WITHSTANDING VOLTAGE:100 V R.M.S.
2.4 INSULATION RESISTANCE 100 MΩ MIN
2.5 OPERATING TEMPEROTURE:-40° C ～ 85° C
3 MECHANICAL CHARACTERISTICS:
3.1 MATING FORCE:3.57kgf MAX
3.2 UNMATING FORCE:1.02kgf MIN
3.3 DURABILITY:MANDATORY:1,500 CYCLES
4. PLATING
4.1 TERMINAL:
50u″ MIN NICKEL ALL OVER
100u″MIN Tin ON SOLDER AREA
(1～30)u″Au ON CONTACT AREA
4.2 SHELL:50u″MIN.NICEL ALL OVER

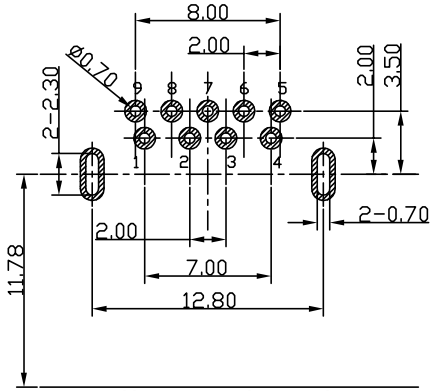

RECOMMANDED PCBA LAYOUT
(TOLERANCE+±0.05)

产品图 PRODUCT CHART DWG				深圳市鑫风雷电子有限公司 Shenzhen xinfenglei Electronic Co., Ltd						
公差一览表 TOLERANCE UNLESS OTHERWISE				单位 UNITS	MM	制图 DRAWING	王 冠	产品料号 PRODUCT PART NO.	17002-U3AF002-A	
X.	±0.30	X°.	±5°	比例 SCALE	1:1	审核 CHKD	雷永健	产品名称 PRODUCT NO.	USB3.0 AF 90度鱼叉脚脚长2.1无边L=16.7	
.X	±0.25	.X°	±2°							
.XX	±0.30	.XX°	±1°	日期 DATE	2009/10/20	核准 APPD	雷永健	角法 VIEW	版本 VER	A0
.XXX	±0.15	.XXX°	±0.5°							

THIS DRAWING CONTAINS INFORMATION THAT IS PROPRIETARY TO XINFENGLEI ELECTRONIC CO.,LTD.AND SHOULD NOT BE USED WITHOUT WRITTEN PERMISSION

由 Autodesk 教育版产品制作