由 Autodesk 教育版产品制作

RoHS 客户图

目錄 MAPX	设变内容 MODIFICATION	日期 DATE
A0	NEW	09-10-20

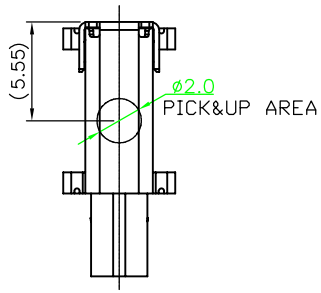

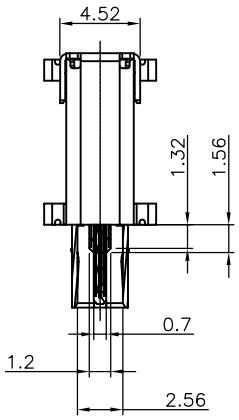

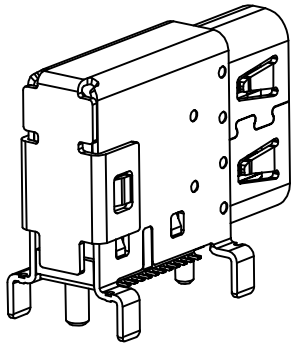

MATERIALS

1. HOUSING : LCP (UL 94V-0), BLACK.
2. TERMINAL : COPPER ALLOY,
   GOLD PLATED ON CONTACT AREA.
   GOLD FLASH PLATING ON SOLDER TAIL.
   NICKEL UNDERPLATED OVER ALL.
3. MID PLATE : STAINLESS STEEL.
4. SHELL : STAINLESS STEEL,NICKEL PLATING.

SPECIFICATION

1. CURRENT RATING : 5.0A FOR Vbus PIN,
   1.25A FOR Vconn PIN,
   0.25A FOR OTHER PINS.
2. CONTACT RESISTANCE : 40mΩ.
3. INSULATION RESISTANCE : 100MΩ MIN.
4. DIELECTRIC WITHSTANDING VOLTAGE : 100 VAC MIN.
5. OPERATING TEMPERATURE : -40°C TO +85°C.
6. MATING FORCE : 5~20N.
7. UNMATING FORCE : 8~20N.
8. DURABILITY : 10,000 CYCLES.
9. RECOMMENDED PROCESS :
   THE PEAK TEMPERATURE ON THE BOARD SHALL MAINTAIN 260°C.

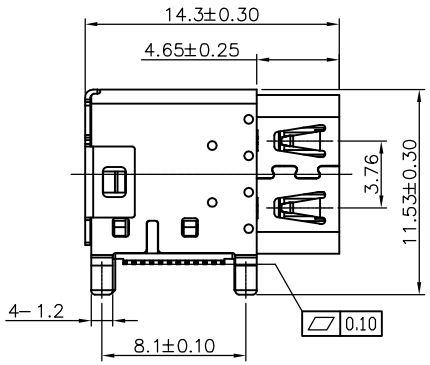

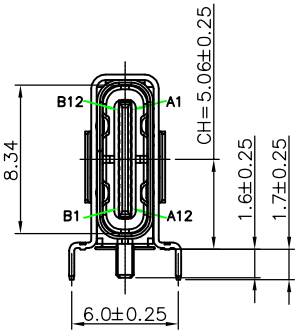

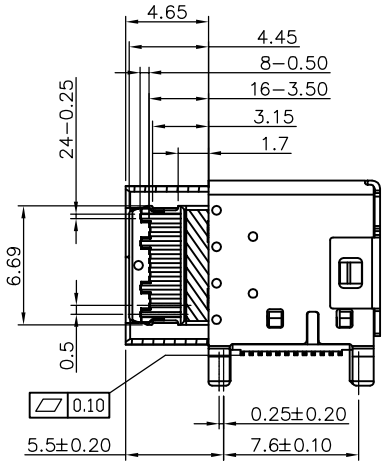

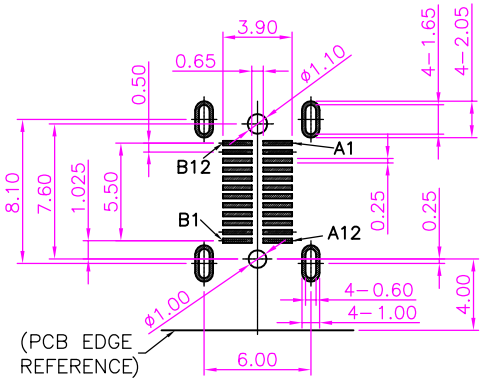

RECOMMENDED P.C.B LAYOUT
TOLERANCE ± 0.05mm (TOP VIEW)

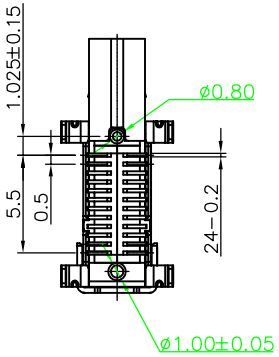

PIN ASSIGNMENT:

PIN	Signal Name	PIN	Signal Name
A1	GND	B12	GND
A2	SSTXp1	B11	SSRXp1
A3	SSTXn1	B10	SSRXn1
A4	Vbus	B9	Vbus
A5	CC1	B8	SBU2
A6	Dp1	B7	DN2
A7	Dn1	B6	DP2
A8	SBU1	B5	CC2
A9	Vbus	B4	Vbus
A10	SSRXn2	B3	SSTXn2
A11	SSRXp2	B2	SSTXp2
A12	GND	B1	GND

产品图 PRODUCT CHART DWG			
公差一览表 TOLERANCE UNLESS OTHERWISE			
X.	±0.30	X°.	±5°
.X	±0.25	.X°	±2°
.XX	±0.20	.XX°	±1°
.XXX	±0.15	.XXX°	±0.5°

深圳市鑫风雷电子有限公司
Shenzhen xinfenglei Electronics Co., Ltd

单位 UNITS	MM	制图 DRAWING	王冠 Wangguan	产品料号 PRODUCT PART NO.	25004-UCAF005-X
比例 SCALE	1:1	审核 CHKD	雷永健 Leiyongjian	产品名称 PRODUCT NO.	Type C 24p母座侧插SMT CH=5.06
日期 DATE	2009/10/20	核准 APPD	雷永健 Leiyongjian	联系方式 Mailbox/web	mailbox: sale1@xflconn.com www.xflconn.com

THIS DRAWING CONTAINS INFORMATION THAT IS PROPRIETARY TO XINFENGLEI ELECTRONIC CO.,LTD.AND SHOULD NOT BE USED WITHOUT WRITTEN PERMISSION

由 Autodesk 教育版产品制作