RoHS 客户图

目錄 MAPX	设变内容 MODIFICATION	日期 DATE
A0	NEW	23-05-05

NOTES:

一、 MECHANICAL:

1 .MATING FORCE: 5-20N MAX.
2 .UNMATING FORCE: 8-20N MIN
3 .DURABILITY: 10000 CYCLES

二、ELECTRICAL:

1 CONTACT CURRENT RATING: 1.25A/PIN FOR VBUS AND GND, 0.9A/PIN FOR ALL OTHER CONTACT.
2 DIELECTRIC WITHSTANDING VOLTAGE: 100V AC AT SEA LEVEL.
3 LOW LEVEL CONTACT RESISTANCE: 40mΩ MAX FOR VBUS AND GND, 50mΩ MAX FOR OTHER CONTACTS。
4 INSULATION RESISTANCE: 100MΩ MIN AT 250VDC.
5 OPERATING TEMPRATUR: -55° ~85° 。E

三、Materials

1. Contact:High performance copper alloy C7025, G/F Au ON CONTACT AREA,100u"Min TIN ON SOLDER AREA.50u"NICKEL UNDERPLATING OVERALL
2. Housing: LCP E130I UL94V-0
3. Shell: Stainless Steel 50u" NICKEL PLATING OVER ALL.
4. mid-plate: Stainless Steel rines rines
5. PCB:FR-4 HF

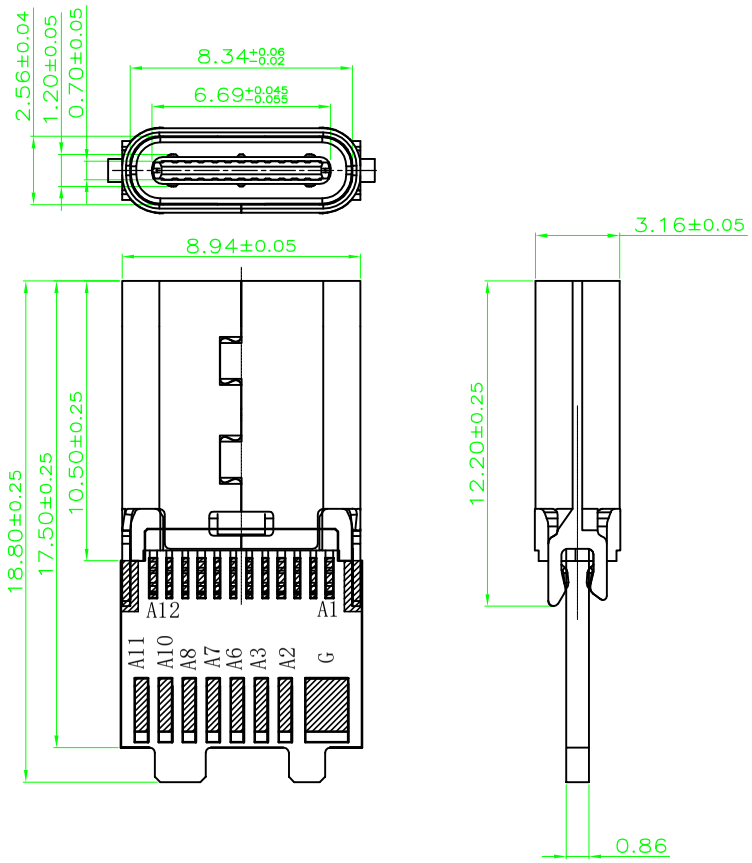

C1=10nf电容

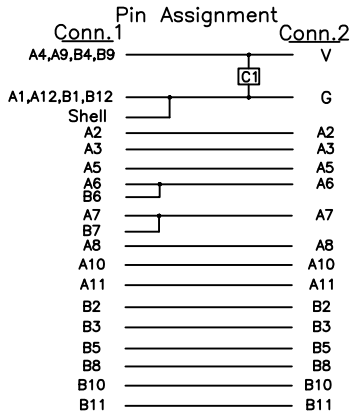

产品图 PRODUCT CHART DWG			
公差一览表 TOLERANCE UNLESS OTHERWISE			
X.	±0.30	X°.	±5°
.X	±0.25	.X°	±2°
.XX	±0.20	.XX°	±1°
.XXX	±0.15	.XXX°	±0.5°

深 圳 市 鑫 风 雷 电 子 有 限 公 司
Shenzhen xinfenglei Electronics Co., Ltd

单位 UNITS	MM	制图 DRAWING	王 冠 Wangguan	产品料号 PRODUCT PART NO.	17014-UCAF005-X
比例 SCALE	1:1	审核 CHKD	雷永健 Leiyongjian	产品名称 PRODUCT NO.	TYPE C 24P母焊线式带板3.1 C-C 16个焊位 L=18.8 C1=10nf 16PAD正面A11 A10 A8 A7 A6 A3 A2 G反面B11 B10 B8 A5 B5 B3 B2 V A6&B6短路A7&B7短路可贴C1
日期 DATE	2023/05/05	核准 APPD	雷永健 Leiyongjian	联系方式 Mailbox/web	mailbox: salel@xflconn.com www.xflconn.com

THIS DRAWING CONTAINS INFORMATION THAT IS PROPRIETARY TO XINFENGLEI ELECTRONIC CO.,LTD.AND SHOULD NOT BE USED WITHOUT WRITTEN PERMISSION

由 Autodesk 教育版产品制作