RoHS 客户图

目錄 MAPX	设变内容 MODIFICATION	日期 DATE
A0	NEW	09-10-20

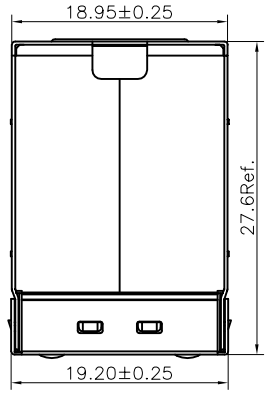

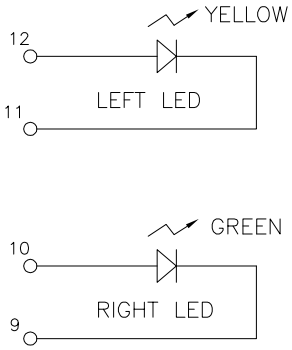

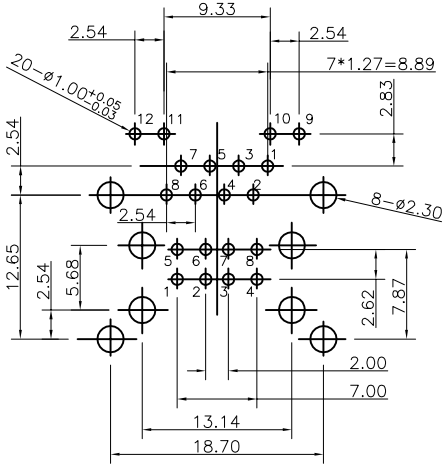

RECOMMENDED P.C.B. PATTERN LAYOUT

COMPONENT SIDE SHOWN

1.MATERIAL:
Housing: PBT Black
Contact:Copper Alloy
Shell: SPCC

2.Electrical performance:
Voltage Current Rating:1.5 AMP. 30V AC
Insulation Resistance:1000MΩ Min.
Contact Resistance:30 mΩ Max.
Dielectric Withstanding Voltage:500V AC

3.Temperature Range:-55℃ to +85℃

4.FINISH:
Contact:Tin Plating 100u" on solder tail area,RJ45 Gold plating 1u" on contact area. USB Gold plating 1u" on contact area, 30u" min Ni underplating over all.

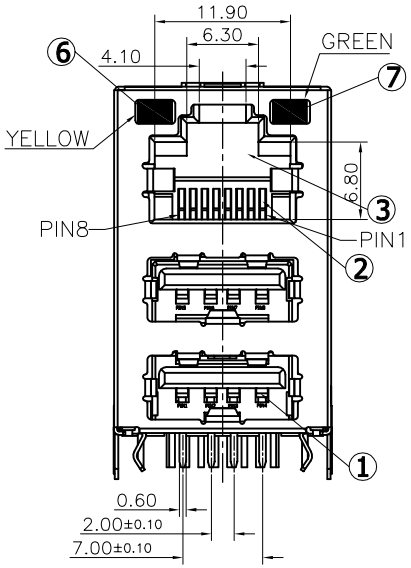

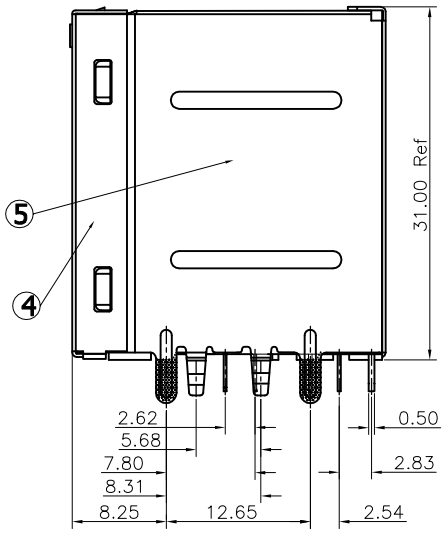

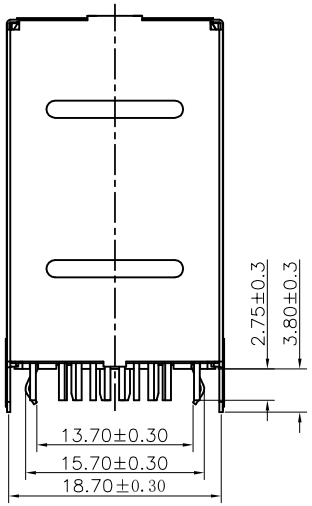

产品图 PRODUCT CHART DWG			
公差一览表 TOLERANCE UNLESS OTHERWISE			
X.	±0.30	X°.	±5°
.X	±0.25	.X°	±2°
.XX	±0.20	.XX°	±1°
.XXX	±0.15	.XXX°	±0.5°

深圳市鑫风雷电子有限公司
Shenzhen xinfenglei Electronics Co., Ltd

单位 UNITS	MM	制图 DRAWING	王冠 Wangguan	产品料号 PRODUCT PART NO.	25031-RJU2F01-X
比例 SCALE	1:1	审核 CHKD	雷永健 Leiyongjian	产品名称 PRODUCT NO.	RJ45+双层USB 2.0 LED左黄右绿三层
日期 DATE	2009/10/20	核准 APPD	雷永健 Leiyongjian	联系方式 Mailbox/web	mailbox: sale1@xflconn.com www.xflconn.com

THIS DRAWING CONTAINS INFORMATION THAT IS PROPRIETARY TO XINFENGLEI ELECTRONIC CO.,LTD.AND SHOULD NOT BE USED WITHOUT WRITTEN PERMISSION

由 Autodesk 教育版产品制作