RoHS 客户图

目錄 MAPX	设变内容 MODIFICATION	日期 DATE
A0	NEW	09-10-20

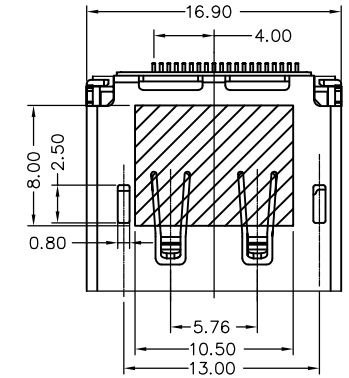

NOTE:
1.MATERIAL:
1.1 HOUSING: LCP, UL 94V-0
COLOR: BLACK.
1.2 CONTACT: C2680, T=0.20mm.
1.3 SHIELD: C2680, T=0.40mm.
1.4 COVER: LCP,UL 94V-0
1.5 MYLAR: POLYIMIDE

2.FINISH:
2.1 CONTACT: GOLD(15U") PLATING IN CONTACT AREA,
GOLDFLASH PLATED IN SOLDER AREA,
50u" MIN. NICKEL UNDERPLATED OVERALL.
2.2 SHIELD: 50u" MIN. NICKEL UNDERPLATED OVERALL.

3.MECHANICAL CHARACTERISTICS
3.1 RATING CURRENT: 0.5A
3.2 RATING VOLTAGE: 40V
3.3 CONTACT RESISTANCE: 40 mΩ MAX
3.4 INSULATION RESISTANCE:
a, UNMATED: 100MΩ MIN AT 500 VDC
b, MATED: 10M OHMS MIN AT 150 VDC
3.5 DIELECTRIC WITHSTANDING VOLTAGE: 500V AC/1MINUTE
3.6 DURABILTY: 10000 CYCLES.
3.7 OPERATING TEPERATURE: -20℃--+85℃
3.8 STORAGE TEMPERATURE: -20℃--+65℃

4. NOTES:
4.1 ALL COMPONENTS ARE RoHS COMPLIANT.
4.2 RESISTANCE TO SOLDERING HEAT: 265℃ FOR 10 SECONDS.

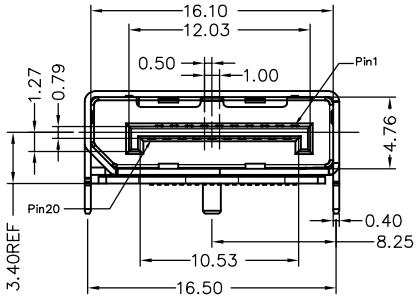

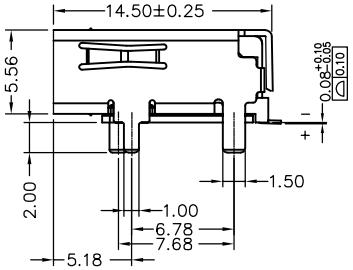

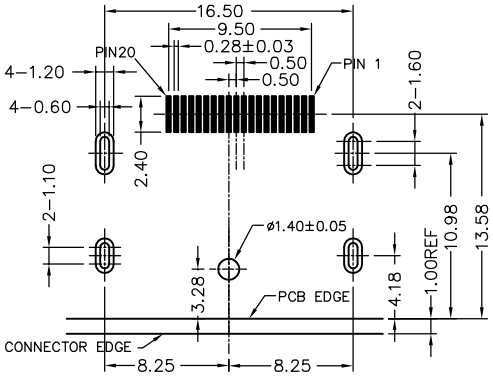

RECOMMENDED P.C.B LAYOUT(PCB THICKNESS: 1.6mm)
COMPONENT SIDE VIEW(TOLERANCE: ±0.05)

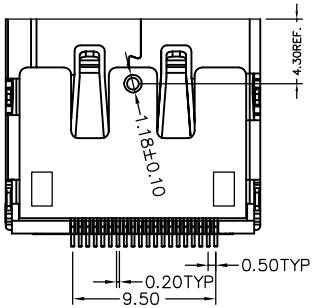

产品图 PRODUCT CHART DWG			
公差一览表 TOLERANCE UNLESS OTHERWISE			
X.	±0.30	X°.	±5°
.X	±0.25	.X°	±2°
.XX	±0.20	.XX°	±1°
.XXX	±0.15	.XXX°	±0.5°

深圳市鑫风雷电子有限公司

单位 UNITS	MM	制图 DRAWING	王 冠	产品料号 PRODUCT PART NO.	19011-DPAF001-B
比例 SCALE	1:1	审核 CHKD	雷永健	产品名称 PRODUCT NO.	Displayport 母 SMT 铜壳无边有柱
日期 DATE	2009/10/20	核准 APPD	雷永健	角法 VIEW	版本 VER A0

THIS DRAWING CONTAINS INFORMATION THAT IS PROPRIETARY TO XINFENGLEI ELECTRONIC CO.,LTD.AND SHOULD NOT BE USED WITHOUT WRITTEN PERMISSION

由 Autodesk 教育版产品制作