RoHS 客户图

目錄 MAPX	设变内容 MODIFICATION	日期 DATE
A0	NEW	09-10-20

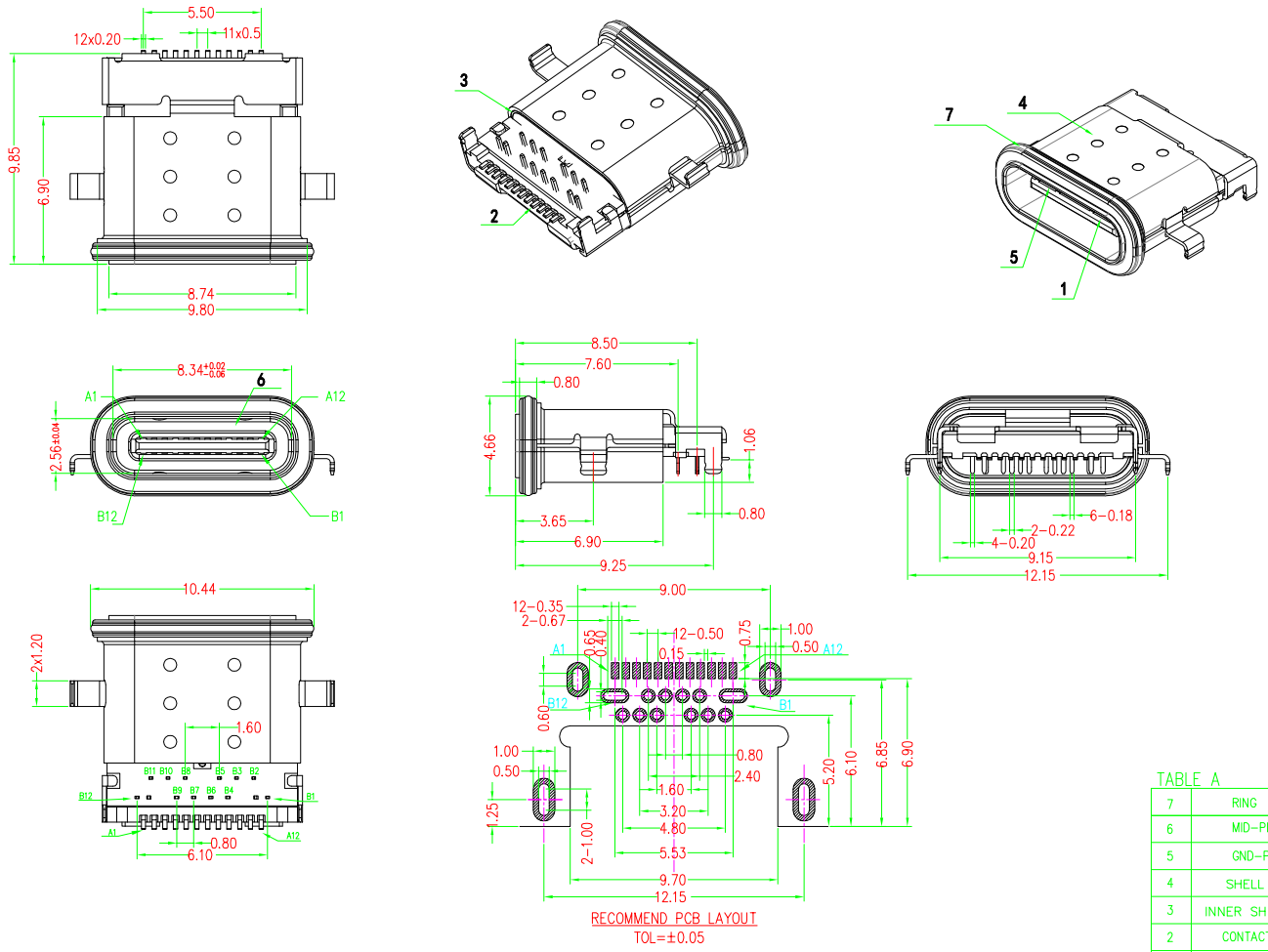

SPECIFICATION:

1.ELECTRICAL:
- 1-1: CURUENT RATAING:
  VBUS AND GND CONTACTS RATED AT 1.25A
  PARALLELED FOR A TOTAL OF 5A;
- 1-2: INITIAL CONTACT RESISTANCE : 40 MEGOHMS
- 1-3: DIEELECTRIC WITHSTANDING VOLTAGE:
  100V AC MIN;

2: MECHANICAL CHARACTERISTICS:
- 2-1: MATING FORCE: 5~20N
- 2-2: UNMATING FORCE: 8~20N(INITIAL),
  6~20N(AFTER 10000 CYCLES)
- 2-3: FREQUENCE: 200±50 CYCLES /HOUR,10000 CYCLES
- 2-4: OPERATING TEMPERATURE ; -40°~80°.

3: WATERPROOF: IP-X7.

TABLE B

A1	GND	B12	GND
A2	SSTXP1	B11	SSRXP1
A3	SSTXN1	B10	SSRXN1
A4	VBUS	B9	VBUS
A5	CC1	B8	SBU2
A6	DP1	B7	DN2
A7	DN1	B6	DP2
A8	SBU1	B5	CC2
A9	VBUS	B4	VBUS
A10	SSRXN2	B3	SSTXN2
A11	SSRXP2	B2	SSTXP2
A12	GND	B1	GND
PIN	SIGNAL NAME	PIN	SIGNAL NAME

TABLE A

NO.	DESCRIPTION	MATERIAL	FINISH PLANTED	QTY	REMARKS
7	RING	SILICON	---	1PCS	
6	MID-PLANT	STAINLESS STEEL	---	1PCS	
5	GND-PLANT	STAINLESS STEEL	NI/SN Plated	1PCS	
4	SHELL	STAINLESS STEEL	---	1PCS	
3	INNER SHELL	STAINLESS STEEL	NI Plated	1PCS	
2	CONTACT	COPPER ALLOY	Au/NI Plated	2SET	
1	HOUSING	HIGH TEMPERATURE PLASTIC	BLACK	1PCS	

产品图 PRODUCT CHART DWG

公差一览表 TOLERANCE UNLESS OTHERWISE

X.	±0.30	X°	±5°
.X	±0.25	.X°	±2°
.XX	±0.30	.XX°	±1°
.XXX	±0.15	.XXX°	±0.5°

深圳市鑫风雷电子有限公司

单位 UNITS	MM	制图 DRAWING	王 冠	产品料号 PRODUCT PART NO.	25001-UCAF001-X
比例 SCALE	1:1	审核 CHKD	雷永健	产品名称 PRODUCT NO.	TYPE C 24P母座沉板1.1防水
日期 DATE	2009/10/20	核准 APPD	雷永健	角法 VIEW	版本 VER: A0

THIS DRAWING AND DESIGN IS PROPRIETARY TO XINFENGLEI ELECTRONIC CO.,LTD.AND SHOULD NOT BE USED WITHOUT WRITTEN PERMISSION

由 Autodesk 教育版产品制作