RoHS Complied

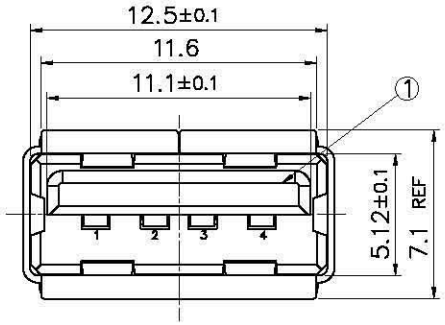

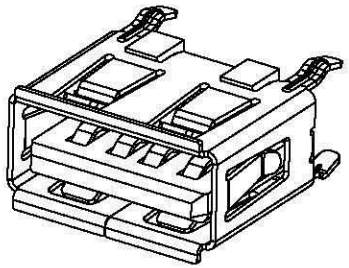

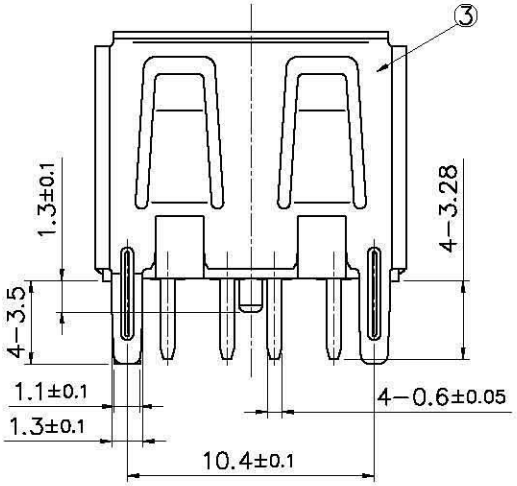

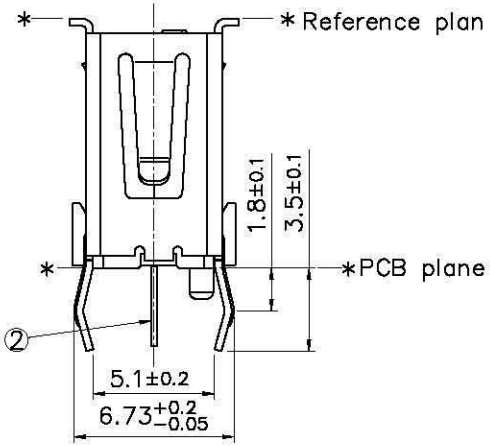

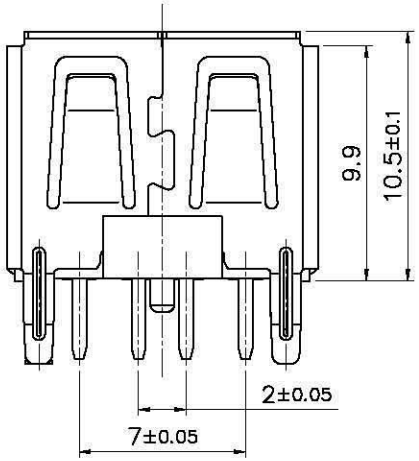

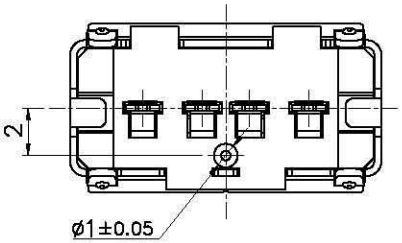

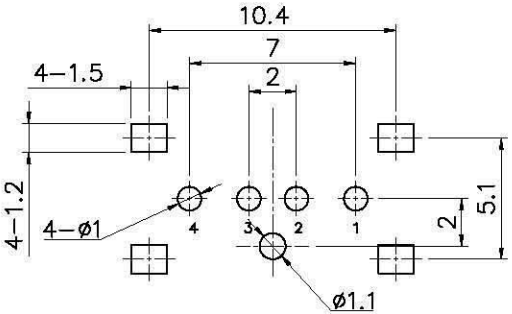

PCB HOLES(THE PATTERN SIDE) t=1.6mm
NOTE: GENERAL TOLERANCE: ±0.05mm

NO.	PART NAME	TER'NO.	QTY.	MATERIAL	REMARK
③	SHELL		1	STEEL T=0.3	NI-PLATED
②	CONTACT		4	PHOSPHOR BRONZE T=0.25	Au/BRIGHT Sn-PLATED
①	HOUSING		1	PC945 NC+PC945 A 94V-0	TRANSLUCENCE

DSND	Peng	DATE	2011.12.24	SCALE: 1:1	USB A母180度插板四脚有边H=10.5
CHKD	Tao	DATE	2011.12.24	VIEW:	PART NO. 14003-U2AF001-X
APVD	Tony	DATE	2011.12.24	UNIT: mm	

深圳市鑫风雷电子有限公司

DWN.NO.

REVISION A/1

MARK	DESCRIPTION	DATE	REVISED	APPROVED
△ X				
△ X				
△ X				
△ X				

REVISIONS

UNSPECIFIED TOLERANCE	
ANGULAR	±5°
63 < L	±0.5
16 < L ≤ 63	±0.4
4 < L ≤ 16	±0.3
L ≤ 4	±0.2