RoHS 客户图

目錄 MAPX	设变内容 MODIFICATION	日期 DATE
A0	NEW	09-10-20

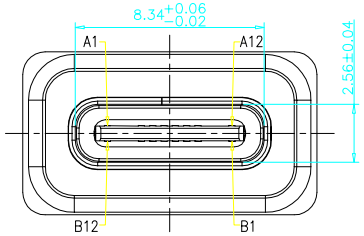

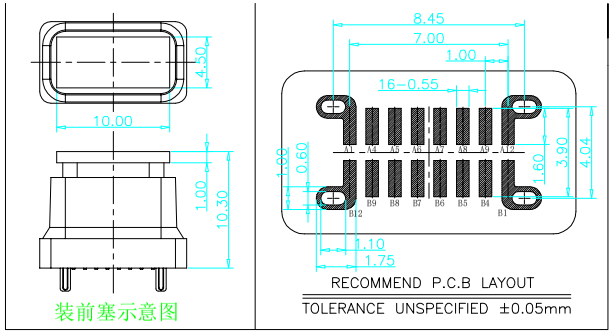

装前塞示意图

NOTES:

SPECIFICATION:

1.CURRENT RATING: 5.0 A
2.VOLTAGE RATING: 5.0 V
3.VBUS & GND PINS AND OTHER PINS: 40mΩ/PIN MAX
SHIELD: 50mΩ/MAX
LLCR MAX. CHANGE OF ALL PINS: 10Ωm
4.INSULATION RESISTANCE: 100MΩ MIN
5.DIELECTRIC WITHSTAND VOLTAGE,AC 100V FOR 1MINUTE
6.LNSERTION FORCE: 0.5~2.0kgf
7.UNMATING FORCE: 0.8-2.0kgf
8.DURABILITY: 10000 CYCLES
9.OPERATING TEMPERATURE: -35°C~+85°C
10.THE PEAK TEMPERATURE ON THE BOARO SHALL BE MAINTAINED FOR 10 SECONDS AT 210-250°C
11.WATERPROOF:IP-X7.

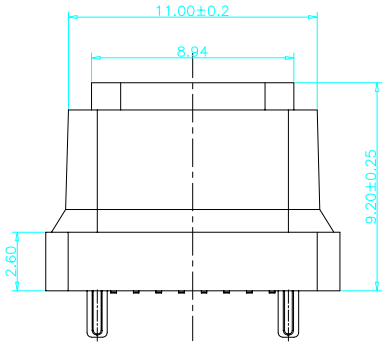

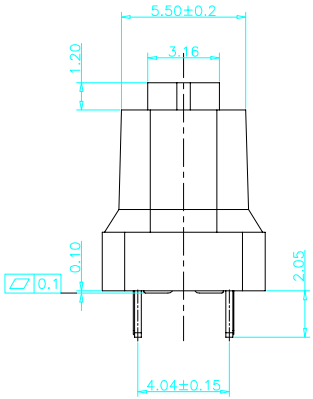

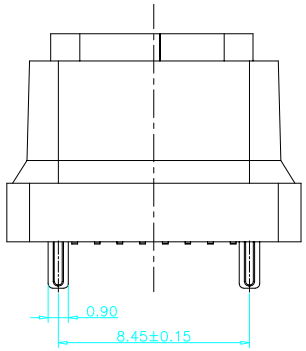

USB TYPE C PIN ASSIGNMENTS

PIN NUMBER	SIGNAL NAME	PIN NUMBER	SIGNAL NAME
A1	GND	B12	GND
A4	VBUS	B9	VBUS
A5	CC1	B8	SBU2
A6	DP1	B7	DN2
A7	DN1	B6	DP2
A8	SBU1	B5	CC2
A9	VBUS	B4	VBUS
A12	GND	B1	GND

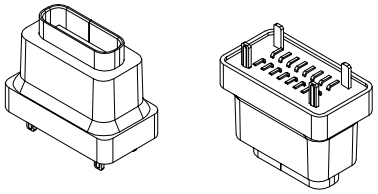

TABLE:

NO	PART	Q'TY	Material
1	PLASTIC SHELL	1	PA&LCP UL94 V-0 BLACK
2	SHELL	1	STAINLESS STEEL,NI PLATED
3	CONTACT	16	COPPER ALLOY,TIN/Au/NI PLATED
4	MD PLATE	1	STAINLESS STEEL,NO PLATING
5	MD HOUSING	1	PA&LCP UL94 V-0 BLACK
6	WATERPROOF RING	1	SILICONE UL94 V-0 BLACK

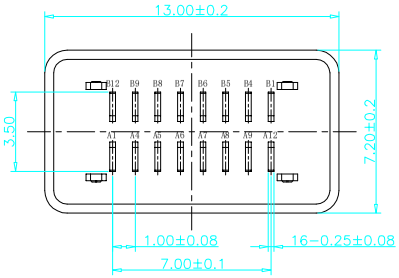

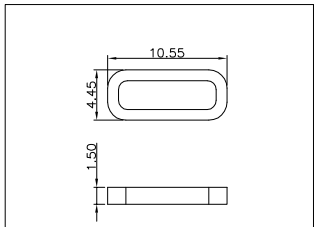

防水圈图示

产品图 PRODUCT CHART DWG				深圳市鑫风雷电子有限公司 Shenzhen xinfenglei Electronics Co., Ltd					
公差一览表 TOLERANCE UNLESS OTHERWISE				单位 UNITS	MM	制图 DRAWING	王冠 Wangguan	产品料号 PRODUCT PART NO.	00101-UCAF036-C
X.	±0.30	X°.	±5°	比例 SCALE	1:1	审核 CHKD	雷永健 Leiyongjian	产品名称 PRODUCT NO.	
.X	±0.25	.X°	±2°						
.XX	±0.20	.XX°	±1°	日期 DATE	2009/10/20	核准 APPD	雷永健 Leiyongjian	联系方式 Mailbox/web	mailbox: sale1@xflconn.com www.xflconn.com
.XXX	±0.15	.XXX°	±0.5°						

THIS DRAWING AND THE INFORMATION THEREON IS PROPRIETARY TO XINFENGLEI ELECTRONIC CO.,LTD.AND SHOULD NOT BE USED WITHOUT WRITTEN PERMISSION

由 Autodesk 教育版产品制作