RoHS 客户图

目 錄 MAPX	设 变 内 容 MODIFICATION	日 期 DATE
A0	NEW	09-10-20

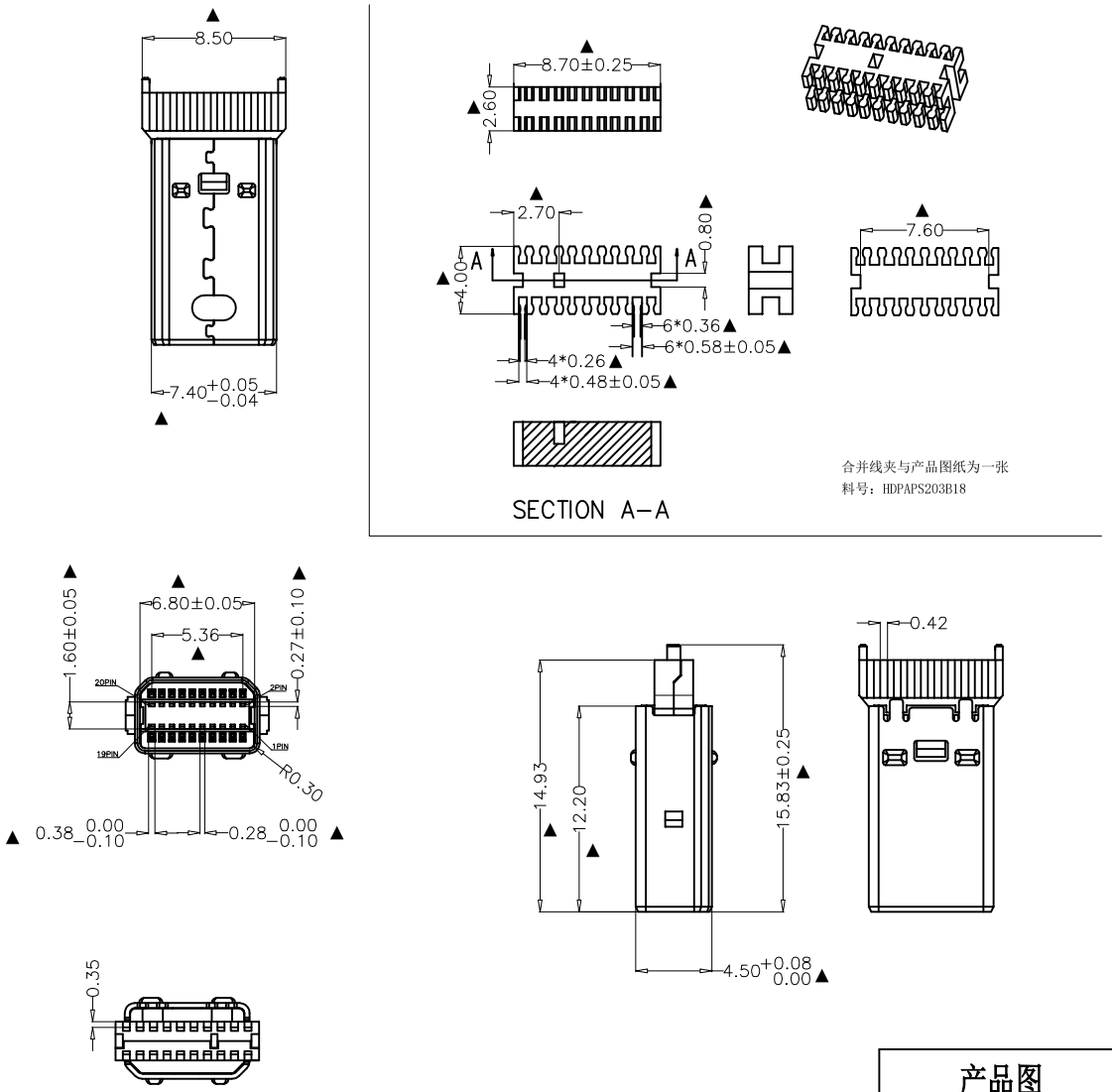

ITEM	TITLE	MATERIAL	DESCRIPTION	REMARK
1	INSERTMOLD	LCP	UL94V-0	BLACK
2	Housing	LCP	UL94V-0	BK/WH
3	TERMINAL	COPPER ALLOY	CONTACT AREA:AU(SEE P/N); SOLDER AREA:SN 50U" MIN.	T=0.20
4	SHELL	C2680/SPCC	PLATING:(SEE P/N)	T=0.30
5	CABLE CLAMP	PA66	UL94V-0	BLACK

NOTE:
1. CONTACT RESISTANCE:30mOHM MAX.;
2. DIELECTRIC WITHSTANDING VOLTAGE:300V AC FOR 1 MINUTE;
3. INSULATION RESISTANCE:100m OHM MIN.;
4. Operation Voltage:30V AC MAX.
5. Rating Current:0.5 Ampere contact
6. MATING FORCE:4.5Kgf MAX.;
7. UNMATING FORCE:1.0~4.0Kgf;
8. DURABILITY:5000 CYCLES;

PART NO.: 8008M-0000001-X

SERISE: MINI DP
PLUG
serial number
Variabler

产品图 PRODUCT CHART DWG			
公差一览表 TOLERANCE UNLESS OTHERWISE			
X.	±0.30	X°.	±5°
.X	±0.25	.X°	±2°
.XX	±0.20	.XX°	±1°
.XXX	±0.15	.XXX°	±0.5°

深圳市鑫风雷电子有限公司
Shenzhen xinfenglei Electronics Co., Ltd

单位 UNITS	MM	制图 DRAWING	王冠 Wangguan	产品料号 PRODUCT PART NO.	8008M-0000001-X
比例 SCALE	1:1	审核 CHKD	雷永健 Leiyongjian	产品名称 PRODUCT NO.	Mini DisplayPort 20M焊线式 隔栏加高0.35mm
日期 DATE	2009/10/20	核准 APPD	雷永健 Leiyongjian	联系方式 Mailbox/web	mailbox：sale1@xflconn.com www.xflconn.com

THIS DRAWING CONTAINS INFORMATION THAT IS PROPRIETARY TO XINFENGLEI ELECTRONIC CO.,LTD.AND SHOULD NOT BE USED WITHOUT WRITTEN PERMISSION

由 Autodesk 教育版产品制作