RoHS 客户图

目錄 MAPX	设变内容 MODIFICATION	日期 DATE
A0	NEW	24-01-26

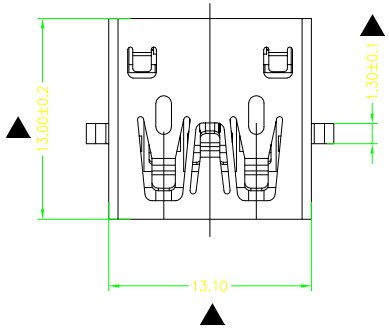

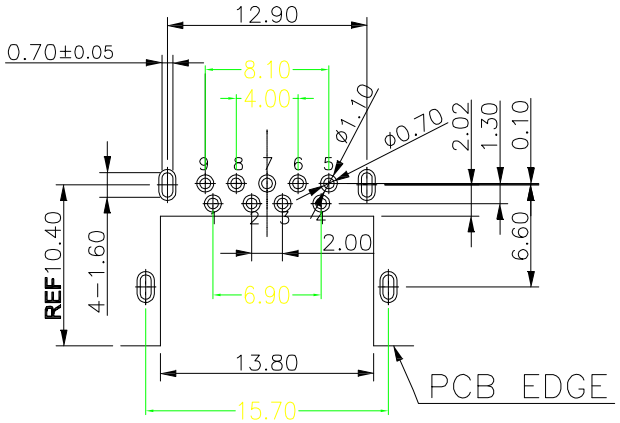

RECOMMENDED PCB LAYOUT
THICKNESS:1.6 mm, TOLERANCE:±0.05

1.ELECTRICAL CHARACTERISTICS;
- 1.1 CONTACTRESISTANCE:30mΩ MAXIMUM
- 1.2 CONTACT CURRENT RATING:1.5A
- 1.3 DIELECTRIC WITHSTANDING VOLTAGE:500 V
- 1.4 INSULATION RESISTANCE 1000 MEGOHMS R.M.
- 1.5 OPERATING TEMPEROTURE:-40°C ~ 85°C MIN

2 MECHANICAL CHARACTERISTICS:
- 2.1 MATING FORCE:3.57kg MAX
- 2.2 UNMATED FORCE:1.02kg MIN
- 2.3 DURABILITY:MANDATORY:5,000 CYCLES

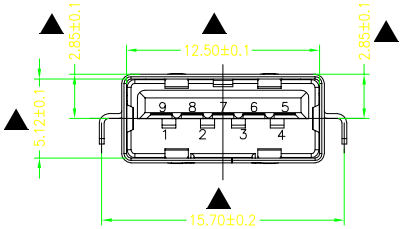

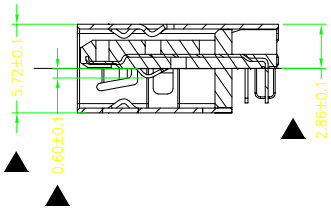

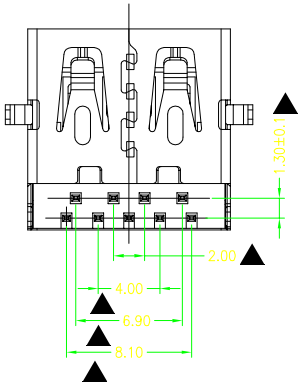

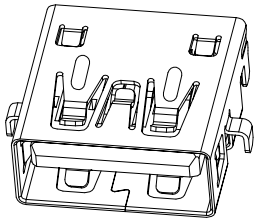

USB 2.0 CONTACT PINS		USB 3.1 CONTACT PINS	
Pin NUMBER	SIGNAL NAME	Pin NUMBER	SIGNAL NAME
1	VBUS	5	StdA_SSRX-
2	D-	6	StdA_SSRX+
3	D+	7	GND_DRAIN
4	GND	8	StdA_SSTX-
Shell	Shield	9	StdA_SSTX+

PART NO.: 8003F-0000024 -X

- SERISE: USB3.0
- Receptacle
- serial number
- Variabler

ITEM	TITLE	MATERIAL	DESCRIPTION	REMARK
1	INSERTMOLD	LCP	UL94V-0	BLUE
2				
3	TERMINAL	C5191 (4Pin)	CONTACT AREA:AU(SEE P/N);	T=0.20
		C5191 (5Pin)	SOLDER AREA:SN 50U" MIN.	T=0.20
4	SHELL	SUS 201	PLATING:NI 30U"MIN.	T=0.30

产品图
PRODUCT CHART DWG

公差一览表
TOLERANCE UNLESS OTHERWISE

X.	±0.30	X°.	±5°
.X	±0.25	.X°	±2°
.XX	±0.20	.XX°	±1°
.XXX	±0.15	.XXX°	±0.5°

深圳市鑫风雷电子有限公司
Shenzhen xinfenglei Electronics Co., Ltd

单位 UNITS	MM	制图 DRAWING	王冠 Wangguan	产品料号 PRODUCT PART NO.	8003F-0000024-X
比例 SCALE	1:1	审核 CHKD	雷永健 Leiyongjian	产品名称 PRODUCT NO.	USB 3.0 AF 双排90度沉板2.86 无边 L=13.0
日期 DATE	2009/10/20	核准 APPD	雷永健 Leiyongjian	联系方式 Mailbox/web	mailbox: sale1@xflconn.com www.xflconn.com

THIS DRAWING IS PROPRIETARY TO XINFENGLEI ELECTRONIC CO.,LTD.AND SHOULD NOT BE USED WITHOUT WRITTEN PERMISSION

由 Autodesk 教育版产品制作