RoHS 客户图

目錄 MAPX	设变内容 MODIFICATION	日期 DATE
A0	NEW	24-03-26

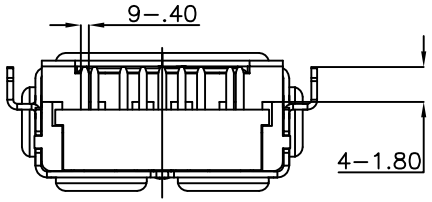

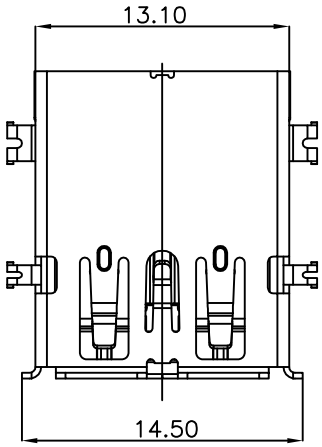

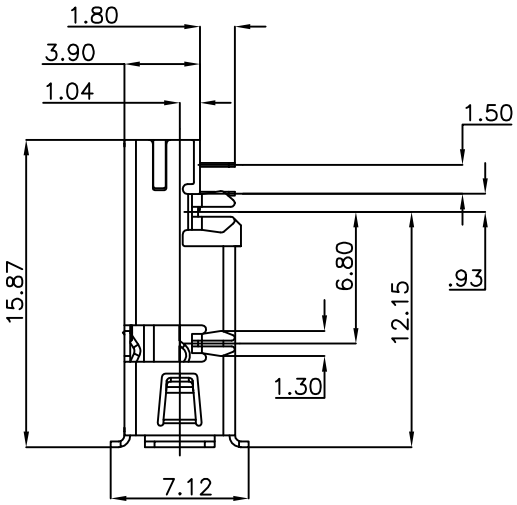

SPECIFICATION
MATERIAL
Insulator: Thermoplastic, rated UL94HB
Contacts: Copper Alloy
Shell: SPCC
CONTACT PLATING
Underplate: 50u"~100u" Nickel
Contact area: 30u"Pb-Ni+2u"Gold
Solder tails area: 100u"~200u" Tin(Matte)
ELECTRICAL
Current rating:
1.8 Amps (max)shall be applied to Vbus pin and its corresponding GND pin.
0.25 Amp(Min) shall be applied to all the other contacts.
Contact resistance:
30 mΩ (Max)intial for VBUS and GND Contacts.
50 mΩ (Max)intial for All Other Contacts.
Insulation resistance: 100 Mohms min @ 250 VDC
Dielectric withstanding voltage: 100 VAC / minute
Temperature range: -20°C TO +85°C

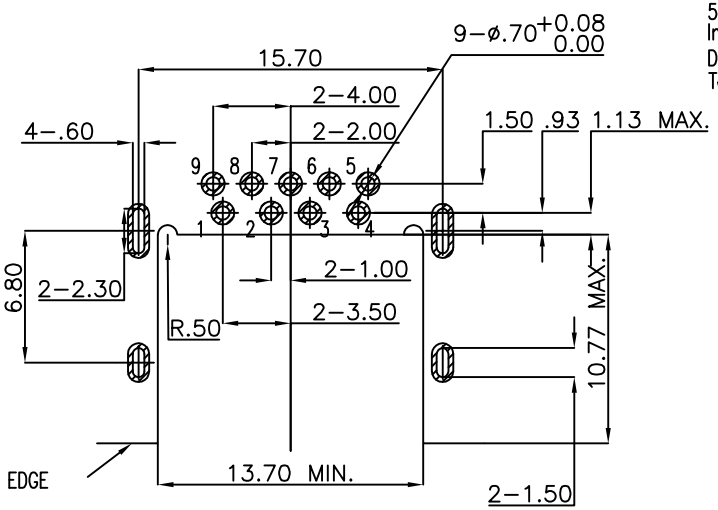

RECOMMENDED P.C.B. LAYOUT
TOLERANCES: ± 0.05mm

PART NO.: 8003F-0000057-X
SERISE: USB3.0
Receptacle
serial number
Variabler

USB 2.0 CONTACT PINS			USB 3.1 CONTACT PINS		
Pin NUMBER		SIGNAL NAME	Pin NUMBER		SIGNAL NAME
1		VBUS	5		StdA_SSRX-
2		D-	6		StdA_SSRX+
3		D+	7		GND_DRAIN
4		GND	8		StdA_SSTX-
Shell		Shield	9		StdA_SSTX+

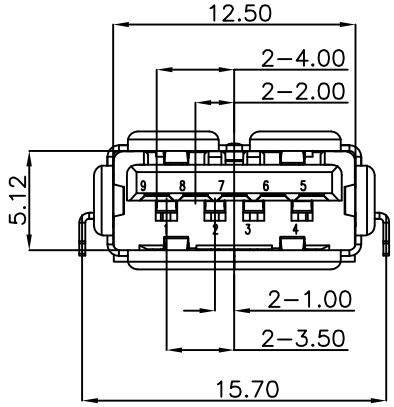

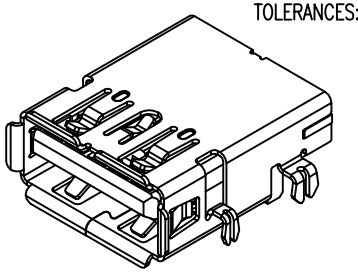

产品图
PRODUCT CHART DWG

公差一览表
TOLERANCE UNLESS OTHERWISE

X.	±0.30	X°.	±5°
.X	±0.25	.X°	±2°
.XX	±0.20	.XX°	±1°
.XXX	±0.15	.XXX°	±0.5°

深圳市鑫风雷电子有限公司
Shenzhen xinfenglei Electronics Co., Ltd

单位 UNITS	MM	制图 DRAWING	王冠 Wangguan	产品料号 PRODUCT PART NO.	8003F-0000057-X
比例 SCALE	1:1	审核 CHKD	雷永健 Leiyongjian	产品名称 PRODUCT NO.	USB3.0 AF 90度沉板正向有边 H=3.9 L=15.87
日期 DATE	2009/10/20	核准 APPD	雷永健 Leiyongjian	联系方式 Mailbox/web	mailbox: salel@xflconn.com www.xflconn.com

(THIS DRAWING CONTAINS INFORMATION THAT IS PROPRIETARY TO XINFENGLEI ELECTRONIC CO.,LTD.AND SHOULD NOT BE USED WITHOUT WRITTEN PERMISSION)

由 Autodesk 教育版产品制作