RoHS 客户图

目錄 MAPX	设变内容 MODIFICATION	日期 DATE
A0	NEW	09-10-20

NOTES:

1.HUOSING: PA9T HIGH-TEMP THERMOPLASTIC UL94V-0 COLOR:BLACK
2.TERMINAL:PHOSPHOR COPPER
PLATING:1μ"GOLD FLASH OVERALL 50~100μ"NICKEL UNDER PLATED.
3.CODING INFORMATION: XFLB3xx-GxxS-BxR

- PACKING: R: CARRIER REEL
- 0:STANDARD SPECIFICATIONS / 1:WITH POSITIONING POSTS / 2:WITHOUT POSITIONING POSTS
- COLOR:BLACK
- SOCKET
- PIN
- PLATING: G:GOLD FLASH
- 0.8 BTB HEIGHT: 30--3.0H;35--3.5H; 40--4.0H;45--4.5H; 50--5.0H;
- XFLCONN BTB CONNECTOR SERIES

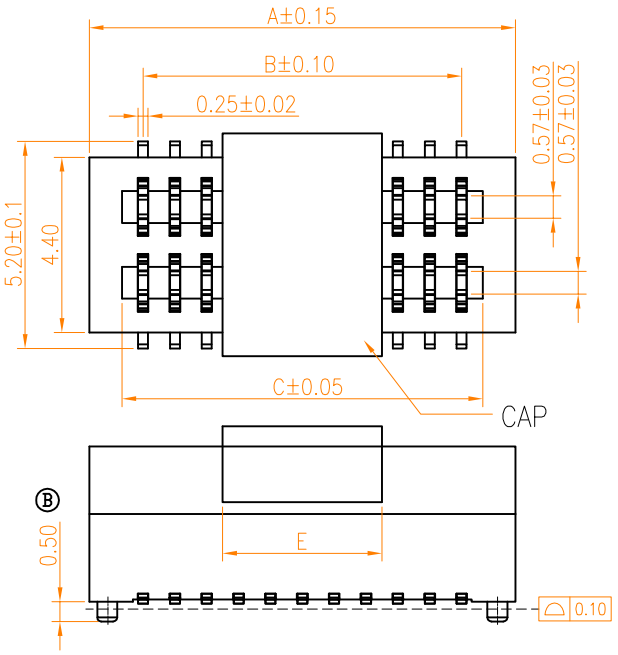

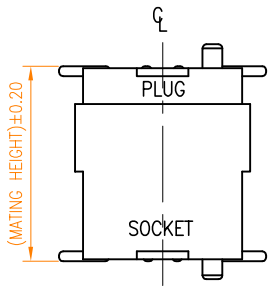

MATING HEIGHT
SCALE:1.25:1

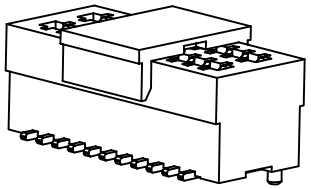

3D VIEW

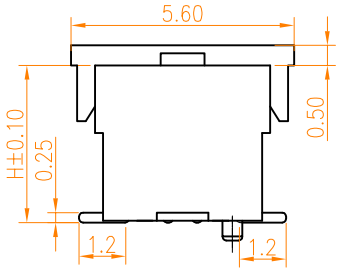

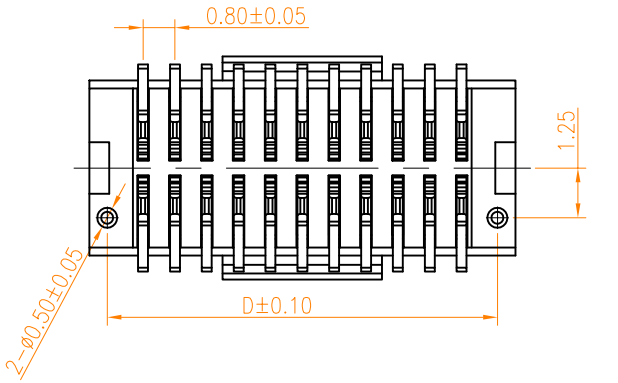

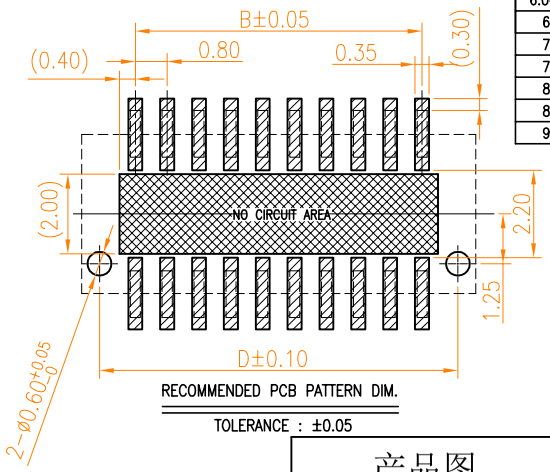

RECOMMENDED PCB PATTERN DIM.

TOLERANCE : ±0.05

MATING HEIGHT	PLUG (H.)	SOCKET (H.)
4.0	1.0	3.0
4.5	1.0	3.5
5.0	1.0	4.0
5.5	1.0	4.5
6.0	1.0	5.0
6.0(特殊)	2.0	4.0
6.5	2.0	4.5
7.0	4.0	3.0
7.5	4.0	3.5
8.0	4.0	4.0
8.5	4.0	4.5
9.0	4.0	5.0

NO.of contacts	Dimensions A.	B.	C.	D.	E.
8	5.10	2.40	3.46	4.20	4.00
10	5.90	3.20	4.26	5.00	
12	6.70	4.00	5.06	5.80	
14	7.50	4.80	5.86	6.60	
16	8.30	5.60	6.66	7.40	
18	9.10	6.40	7.46	8.20	
20	9.90	7.20	8.26	9.00	
22	10.70	8.00	9.06	9.80	8.00
24	11.50	8.80	9.86	10.60	
26	12.30	9.60	10.66	11.40	
28	13.10	10.40	11.46	12.20	
30	13.90	11.20	12.26	13.00	
32	14.70	12.00	13.06	13.80	
34	15.50	12.80	13.86	14.60	
36	16.30	13.60	14.66	15.40	
38	17.10	14.40	15.46	16.20	
40	17.90	15.20	16.26	17.00	
42	18.70	16.00	17.06	17.80	
44	19.50	16.80	17.86	18.60	
46	20.30	17.60	18.66	19.40	
48	21.10	18.40	19.46	20.20	
50	21.90	19.20	20.26	21.00	
54	23.50	20.80	21.86	22.60	
56	24.30	21.60	22.66	23.40	

NO.of contacts	Dimensions A.	B.	C.	D.	E.
58	25.10	22.40	23.46	24.20	8.00
60	25.90	23.20	24.26	25.00	
62	26.70	24.00	25.06	25.80	
64	27.50	24.80	25.86	26.60	
66	28.30	25.60	26.66	27.40	
68	29.10	26.40	27.46	28.20	
70	29.90	27.20	28.26	29.00	
72	30.70	28.00	29.06	29.80	
74	31.50	28.80	29.86	30.60	
76	32.30	29.60	30.66	31.40	
78	33.10	30.40	31.46	32.20	
80	33.90	31.20	32.26	33.00	
82	34.70	32.00	33.06	33.80	
84	35.50	32.80	33.86	34.60	
86	36.30	33.60	34.66	35.40	
88	37.10	34.40	35.46	36.20	
90	37.90	35.20	36.26	37.00	
92	38.70	36.00	37.06	37.80	
94	39.50	36.80	37.86	38.60	
96	40.30	37.60	38.66	39.40	
98	41.10	38.40	39.46	40.20	
100	41.90	39.20	40.26	41.00	

产品图 PRODUCT CHART DWG			
公差一览表 TOLERANCE UNLESS OTHERWISE			
X.	±0.30	X°.	±5°
.X	±0.25	.X°	±2°
.XX	±0.30	.XX°	±1°
.XXX	±0.15	.XXX°	±0.5°

深圳市鑫风雷电子有限公司
Shenzhen xinfenglei Electronic Co., Ltd

单位 UNITS	MM	制图 DRAWING	王 冠	产品料号 PRODUCT PART NO.	XFLB3XX-GXXS-BXR
比例 SCALE	1:1	审核 CHKD	雷永健	产品名称 PRODUCT NO.	0.8mm 双槽BTB SOCKET 母座
日期 DATE	2009/10/20	核准 APPD	雷永健	角法 VIEW	图号 VER 12016

THIS DRAWING CONTAINS INFORMATION THAT IS PROPRIETARY TO XINFENGLEI ELECTRONIC CO.,LTD.AND SHOULD NOT BE USED WITHOUT WRITTEN PERMISSION

由 Autodesk 教育版产品制作