RoHS 客户图

目錄 MAPX	设变内容 MODIFICATION	日期 DATE
A0	NEW	09-10-20

PIN ASSIGNMENT												BLADE	SHELL
A1	A2	A3	A4	A5	A6	A7	A8	A9	A10	A11	A12	GND	GND
GND	TX1+	TX1-	VBUS	CC1	D+	D-	SBU1	VBUS	RX2-	RX2+	GND		
GND	RX1+	RX1-	VBUS	SBU2	D-	D+	CC2	VBUS	TX2-	TX2+	GND		
B12	B11	B10	B9	B8	B7	B6	B5	B4	B3	B2	B1		

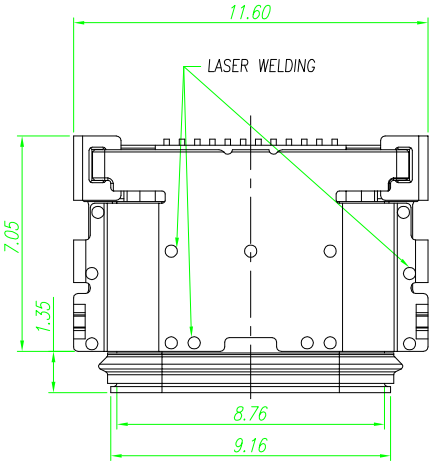

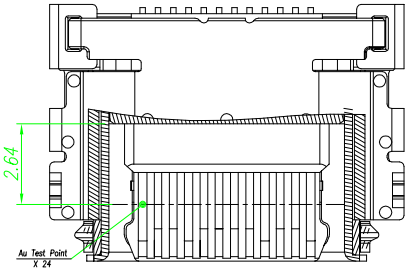

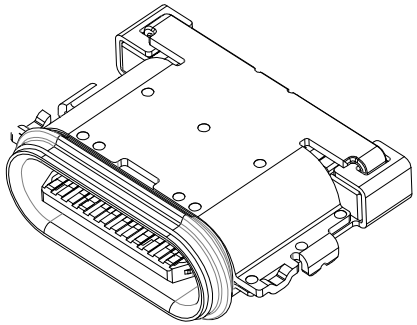

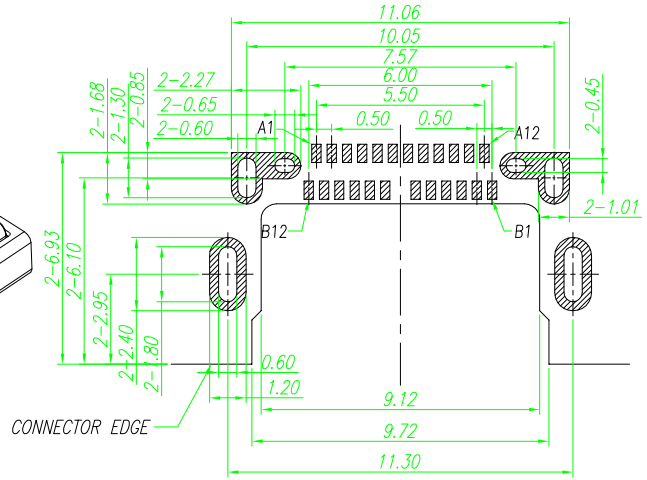

P.C.B LAYOUT VIEW (TOLERANCE ±0.05)

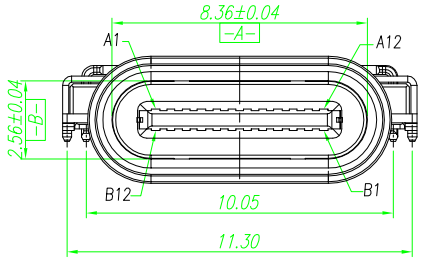

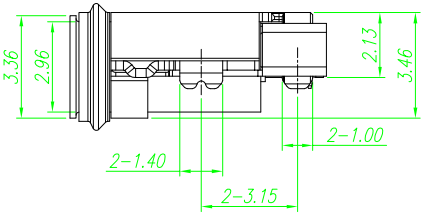

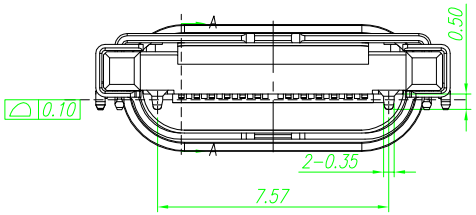

SPECIFICATION:

1.ELECTRICAL CHARACTERISTICS:
- 1.1 CURRENT RATING: 5 A
- 1.2 TEMPERATURE RANGE: -40 °C ~ 85 °C
- 1.3 CONTACT RESISTANCE: 30 MILLIONHM MAX.
- 1.4 DIELECTRIC WITHSTANDING VOLTAGE: 100 VAC r.m.s
- 1.5 INSULATION RESISTNACE: 100 MEGOHMS MIN.

2.MECHANICAL CHARACTERISTICS
- 2.1 INSERTION FORCE: 5~20N
- 2.2 EXTRACTION FORCE: Initial:8~20N,ATER TEST 6~20N
- 2.3 DURABILITY:10,000CYCLES

3.THE SHELL LENTH IS LESS THAN THE MINIMUM SPECIFIED BY THE USB TYPE C STANDARD.AS SUCH IS CONNOT INDENOENDENTLY BE GUARANTEED TO MEET ALL TYPE C MECHANICAL REQUIREMENTS.

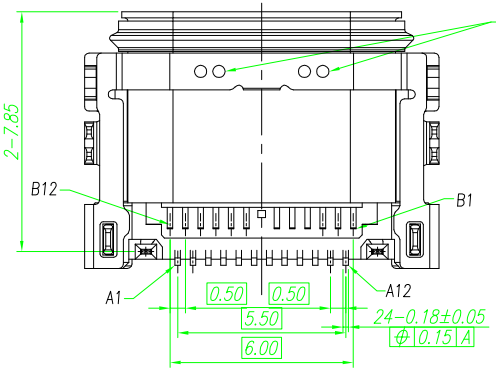

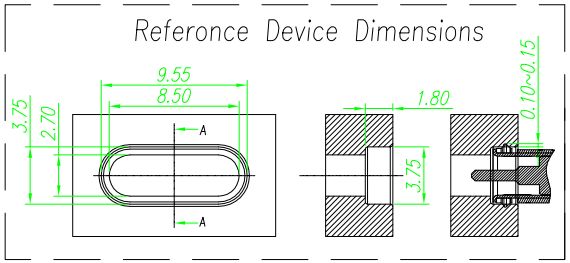

NO.	DESCRIPTION	QTY.	MATERIAL	FINISHED
4	UP+DW_SHELL	1 PCS	STAINLESS STEEL	Ni Plated
3	CONTACT	1 SET	COPPER ALLOY	Au & Ni Plated
2	IM HOUSING	1 PCS	PLASTIC	None
1	MAIN SHELL	1 PCS	STAINLESS STEEL	Ni Plated

产品图
PRODUCT CHART DWG

公差一览表
TOLERANCE UNLESS OTHERWISE

X.	±0.30	X°.	±5°
.X	±0.25	.X°	±2°
.XX	±0.30	.XX°	±1°
.XXX	±0.15	.XXX°	±0.5°

深圳市鑫风雷电子有限公司
Shenzhen xinfenglei Electronic Co., Ltd

单位 UNITS	MM	制图 DRAWING	王冠 Wangguan	产品料号 PRODUCT PART NO.	8001F-FS24015-B		
比例 SCALE	1:1	审核 CHKD	雷永健 Leiyongjian	产品名称 PRODUCT NO.	Type C 24p母座沉板H=2.13 L=8.4 防水单防水圈		
日期 DATE	2009/10/20	核准 APPD	雷永健 Leiyongjian	角法 VIEW		版本 VER	A0

THIS DRAWING CONTAINS INFORMATION THAT IS PROPRIETARY TO XINFENGLEI ELECTRONIC CO.,LTD.AND SHOULD NOT BE USED WITHOUT WRITTEN PERMISSION

由 Autodesk 教育版产品制作