RoHS 客户图

目錄 MAPX	设变内容 MODIFICATION	日期 DATE
A0	NEW	18-10-20

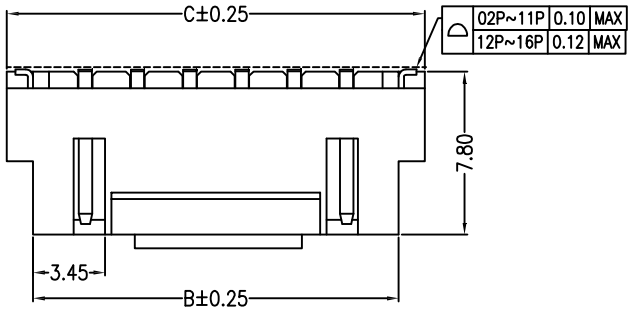

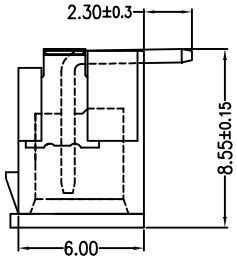

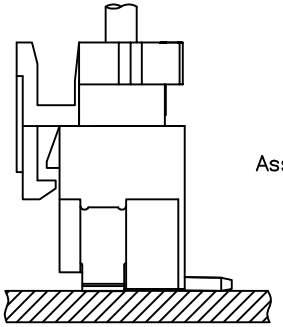

Assembly Layout

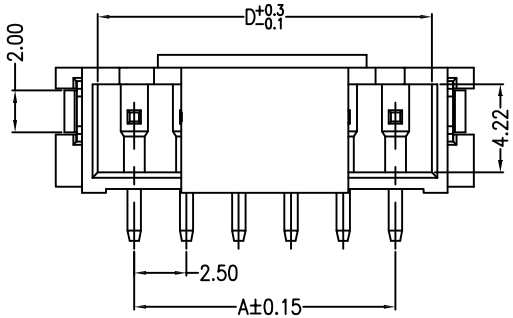

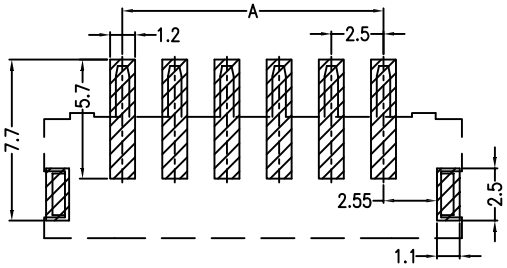

SUGGESTED PCB LAYOUT

Circuit	Dimensions(mm)			
	DIM. A	DIM. B	DIM. C	DIM. D
02	2.50	7.50	10.00	6.00
03	5.00	10.00	12.50	8.50
04	7.50	12.50	15.00	11.00
05	10.00	15.00	17.50	13.50
06	12.50	17.50	20.00	16.00
07	15.00	20.00	22.50	18.50
08	17.50	22.50	25.00	21.00
09	20.00	25.00	27.50	23.50
10	22.50	27.50	30.00	26.00
11	25.00	30.00	32.50	28.50
12	27.50	32.50	35.00	31.00
13	30.00	35.00	37.50	33.50
14	32.50	37.50	40.00	36.00
15	35.00	40.00	42.50	38.50
16	37.50	42.50	45.00	41.00

Specifications:

Contact resistance:≤20mΩ
Insulation resistance:≥1000MΩ
Rated voltage:250V AC DC
Rated current:3.0A AC DC
Withstand voltage:1000V AC/minute
Temperature range:-25℃～ +105℃
Housing:LCP,UL94V-0, Natural
Cap:LCP,UL94V-0, Natural
Contacts:Brass/Sn
Solder tabs:PhosphorBronze/Sn

PART NO.: 8031F-2500002-XP

SERISE: Wafer
Receptacle
serial number
Variabler

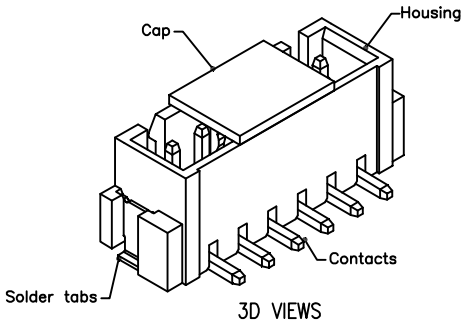

3D VIEWS

产品图 PRODUCT CHART DWG				深圳市鑫风雷电子有限公司 Shenzhen xinfenglei Electronics Co., Ltd					
公差一览表 TOLERANCE UNLESS OTHERWISE				单位 UNITS	MM	制图 DRAWING	王冠 Wangguan	产品料号 PRODUCT PART NO.	8031F-2500002-XP
X.	±0.30	X°.	±5°	比例 SCALE	1:1	审核 CHKD	雷永健 Leiyongjian	产品名称 PRODUCT NO.	Wafer母座立贴 带扣 2.5MM PITCH VERTICAL HEADER
.X	±0.25	.X°	±2°						
.XX	±0.20	.XX°	±1°	日期 DATE	2009/10/20	核准 APPD	雷永健 Leiyongjian	联系方式 Mailbox/web	mailbox: salel@xflconn.com www.xflconn.com
.XXX	±0.15	.XXX°	±0.5°						

THIS DRAWING CONTAINS INFORMATION THAT IS PROPRIETARY TO XINFENGLEI ELECTRONIC CO.,LTD.AND SHOULD NOT BE USED WITHOUT WRITTEN PERMISSION

由 Autodesk 教育版产品制作