由 Autodesk 教育版产品制作

RoHS 客户图

目錄 MAPX	设变内容 MODIFICATION	日期 DATE
A0	NEW	09-10-20

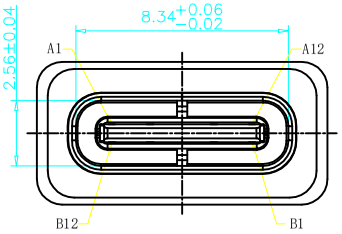

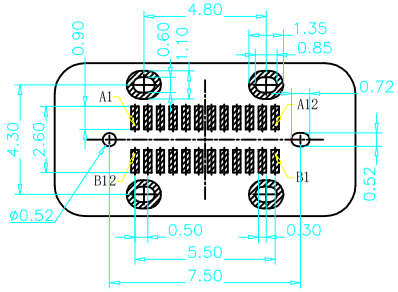

RECOMMEND P.C.B LAYOUT(COMPONENT SIDE)

TOLERANCE FOR PCB LAYOUT IS ±0.05

NOTE:

1.MECHANICAL PERFORMANCE,
1-1.INSERTION FORCE: 0.5~2.0kgf.
1-2.EXTRACTION FORCE: 0.8kgf~2.0kgf.
0.6kgf~2.0kgf. AFTER DURABILITY TEST.
1-3.DURABILITY: 10000 CYCLES.
2.ELECTRICAL PERFORMANCE,
2-1. CURRENT RATING:5.0A
VOLTAGE RATING:5.0V
2-2. LLCR:
VBUS & GND PINS AND OTHER PINS: 40mΩ/PIN MAX.
SHIELD: 50mΩ/MAX.
LLCR MAX. CHANGE OF ALL PINS: 10mΩ.
2-3.INSULATION RESISTANCE: 100MΩ MIN
2-4.DIELECTRIC WITHSTAND VOLTAGE,AC 100V FOR 1 MINUTE.
3. ENVIRONMENTAL PERFORMANCE:
OPERATING TEMPERATURE: -25°C~+85°C.
4.IR REFLOW:
THE PEAK TEMPERATURE ON THE BOARD SHALL BE MAINTAINED FOR 10 SECONDS AT 260°C.
5.符合ROHS&HF要求。
6.SALT SPRAY TEST REQUIRES 48H

防水圈尺寸图

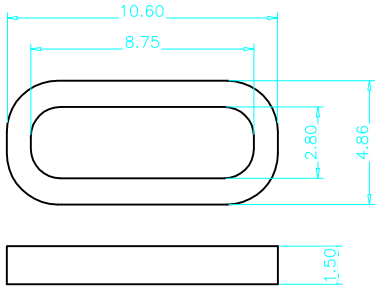

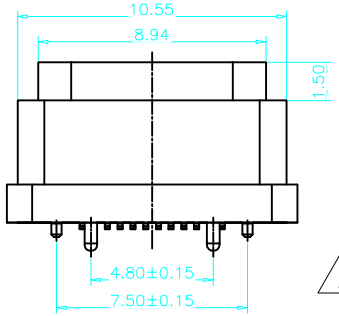

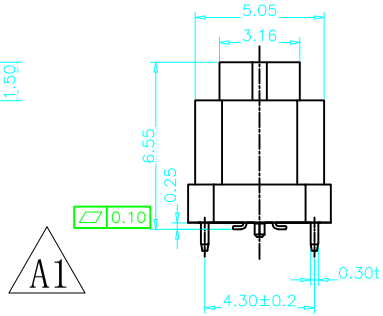

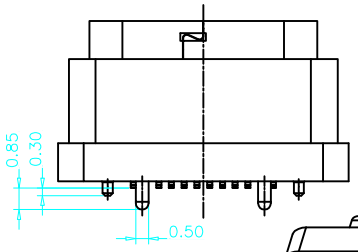

TABLE:

备注：

1. 材质：硅胶SI70A黑色无卤，耐高温270度，硬度70+/-5 UL94V-2
2. 不可缺胶，变形，毛边，脏污。

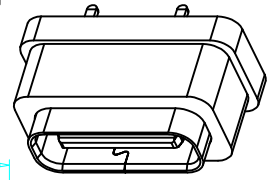

USB TYPE C PIN ASSIGNMENTS

PIN NUMBER	SIGNAL NAME	PIN NUMBER	SIGNAL NAME
A1	GND	B12	GND
A2	SSTXP1	B11	SSRXP1
A3	SSTXN1	B10	SSRXN1
A4	VBUW	B9	VBUS
A5	CC1	B8	SBU2
A6	DP1	B7	DN2
A7	DN1	B6	DP2
A8	SBU1	B5	CC2
A9	VBUS	B4	VBUS
A10	SSRXN2	B3	SSTXN2
A11	SSRXP2	B2	SSTXP2
A12	GND	B1	GND

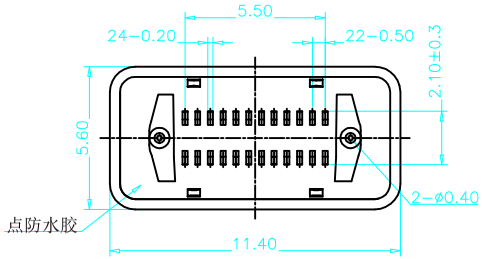

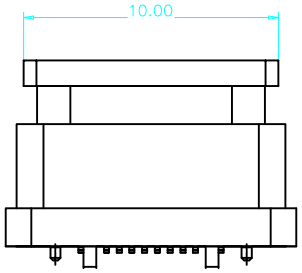

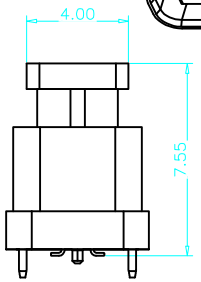

CAP尺寸图

NO	PART	Q'TY	Material
1	SHELL	1	STAINLESS STEEL 304, NI 30u" MIN PLATED
2	EMI Plate	1	STAINIESS STEEL 301,NI 30u" MIN PLATED
3	Mid Plate	1	STAINIESS STEEL 301, NO PLATED
4	CONTACT	24	COPPER STEEL C18400,接触镀金3u''焊接区G/F，镍底50u''Min
5	1MD HOUSING	1	LCP BLACK UL94 V-0
6	2MD HOUSING	1	LCP BLACK UL94 V-0
7	PLASTIC SHELL	1	PA10T BLACK UL94 V-0
8	CAP	1	LCP BLACK UL94 V-0
9	防水胶		硅胶8935

产品图 PRODUCT CHART DWG

公差一览表 TOLERANCE UNLESS OTHERWISE

X.	±0.30	X°.	±5°
.X	±0.25	.X°	±2°
.XX	±0.20	.XX°	±1°
.XXX	±0.15	.XXX°	±0.5°

深圳市鑫风雷电子有限公司
Shenzhen xinfenglei Electronics Co., Ltd

单位 UNITS	MM	制图 DRAWING	王冠 Wangguan	产品料号 PRODUCT PART NO.	8001F-FS24011-X
比例 SCALE	1:1	审核 CHKD	雷永健 Leiyongjian	产品名称 PRODUCT NO.	Type C 24P 180度立式SMT H=6.5 防水型
日期 DATE	2009/10/20	核准 APPD	雷永健 Leiyongjian	联系方式 Mailbox/web	mailbox: sale1@xflconn.com www.xflconn.com

THIS DRAWING CONTAINS INFORMATION THAT IS PROPRIETARY TO XINFENGLEI ELECTRONIC CO.,LTD.AND SHOULD NOT BE USED WITHOUT WRITTEN PERMISSION

由 Autodesk 教育版产品制作

由 Autodesk 教育版产品制作

RoHS 客户图

目錄 MAPX	设变内容 MODIFICATION	日期 DATE
A0	NEW	09-10-20

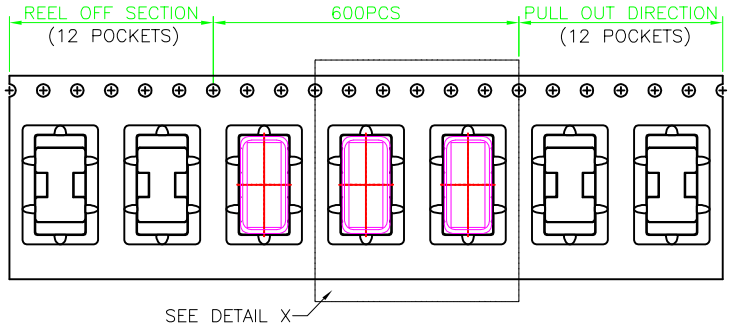

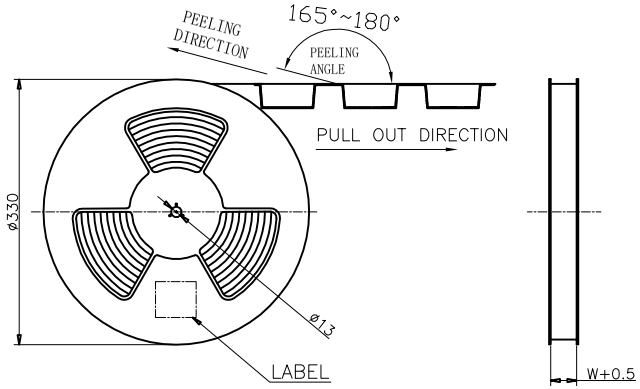

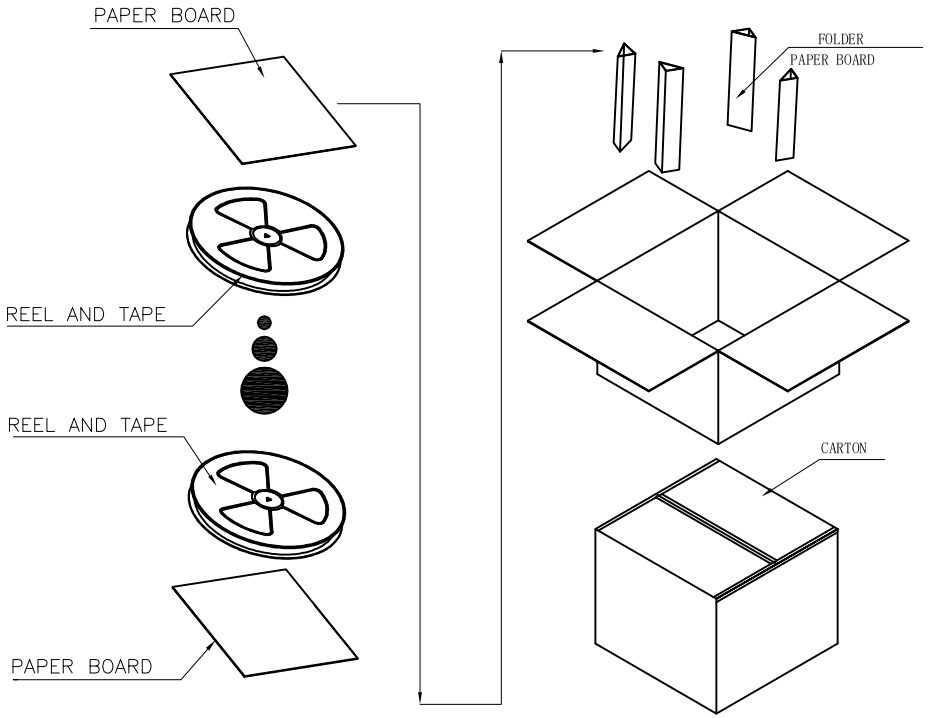

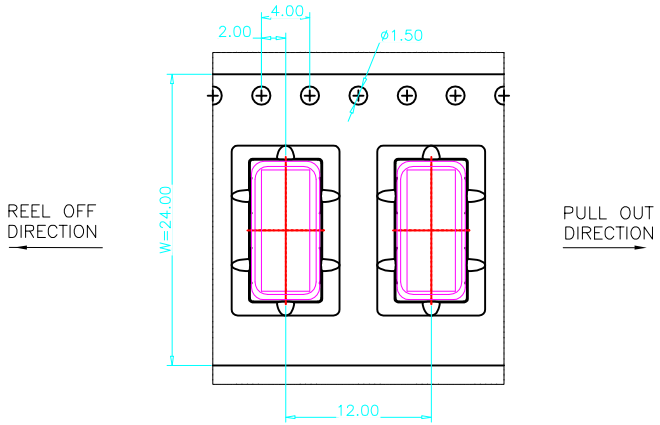

	REEL	CARTON
CONNECTOR (PCS)	600	6000

产品图 PRODUCT CHART DWG

公差一览表 TOLERANCE UNLESS OTHERWISE

X.	±0.30	X°.	±5°
.X	±0.25	.X°	±2°
.XX	±0.20	.XX°	±1°
.XXX	±0.15	.XXX°	±0.5°

深圳市鑫风雷电子有限公司
Shenzhen xinfenglei Electronics Co., Ltd

单位 UNITS	MM	制图 DRAWING	王冠 Wangguan	产品料号 PRODUCT PART NO.	8001F-FS24011-X
比例 SCALE	1:1	审核 CHKD	雷永健 Leiyongjian	产品名称 PRODUCT NO.	Type C 24P 180度立式SMT H=6.5 防水型
日期 DATE	2009/10/20	核准 APPD	雷永健 Leiyongjian	联系方式 Mailbox/web	mailbox: sale1@xflconn.com www.xflconn.com

THIS DRAWING CONTAINS INFORMATION THAT IS PROPRIETARY TO XINFENGLEI ELECTRONIC CO.,LTD.AND SHOULD NOT BE USED WITHOUT WRITTEN PERMISSION

由 Autodesk 教育版产品制作