RoHS 客户图

目錄 MAPX	设变内容 MODIFICATION	日期 DATE
A0	NEW	09-10-20

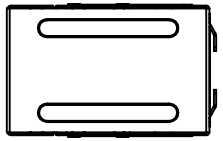

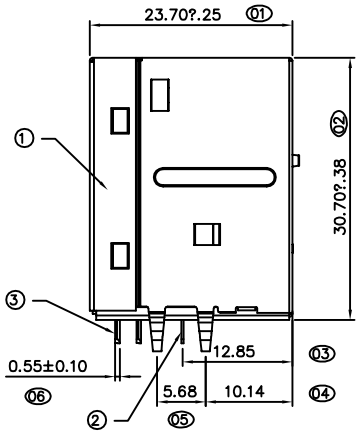

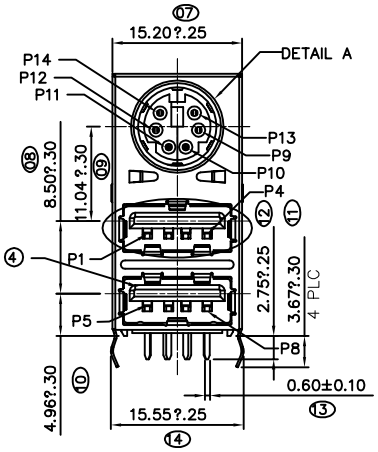

7	COVER	PBT 30% G/F UL94V-0 PA66 30% G/F UL94V-0		BLACK
6	MINI DIN HOUSING	PBT 30% G/F UL94V-0 PA66 30% G/F UL94V-0		GREEN
5	MINI DIN BEAD-HOUSING	PBT 30% G/F UL94V-0 PA66 30% G/F UL94V-0		PURPLE
4	USB-HOUSING	LCP UL94V-0 LCP UL94V-0		BLACK
3	MID CONTACT	BRASS T=0.20	Au PLATING ON CONTACT AREA. 100u" MIN. MATTE Sn PLATING ON SOLDER TAIL AREA. 50u" MIN. NICKEL UNDERPLATING OVERALL.	
2	USB CONTACT	BRASS T=0.25	Au PLATING ON CONTACT AREA. 100u" MIN. MATTE Sn PLATING ON SOLDER TAIL AREA. 50u" MIN. NICKEL UNDERPLATING OVERALL.	
1	SHELL	SUS430 T=0.25	Kink MATTE Sn 60u"Min OVER Ni 20u"Min(salt spray 48 hour test)	
		SPCC-SD T=0.25	under plated NI 50u" Kink MATTE Sn 60u"Min (salt spray 8 hour test)hour test)	
	NAME	MATERIAL	PLATING	COLOR

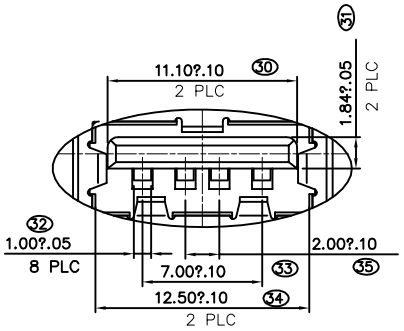

DETAIL B
SCALE 2:1

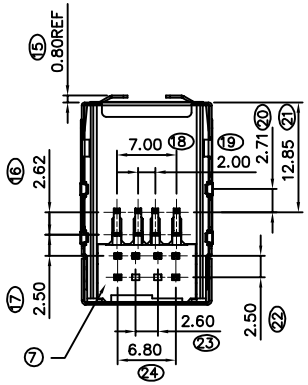

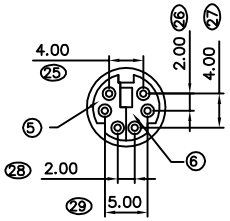

DETAIL A

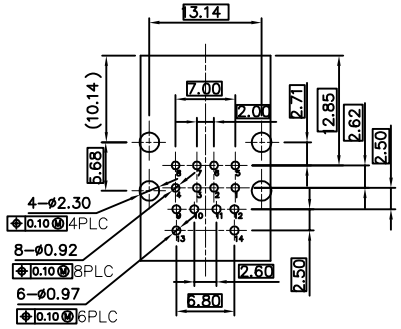

RECOMMENDED PCB LAYOUT
TOLERANCE: ±0.05

产品图 PRODUCT CHART DWG				深圳市鑫风雷电子有限公司					
公差一览表 TOLERANCE UNLESS OTHERWISE				单位 UNITS	MM	制图 DRAWING	王 冠	产品料号 PRODUCT PART NO.	00710-U2FMID2-X
X.	±0.30	X°	±5°	比例 SCALE	1:1	审核 CHKD	雷永健	产品名称 PRODUCT NO.	MID+USB2.0双层母座三层
.X	±0.25	.X°	±2°						
.XX	±0.30	.XX°	±1°	日期 DATE	2009/10/20	核准 APPD	雷永健	角法 VIEW	版本 VER A0
.XXX	±0.15	.XXX°	±0.5°						

THIS DRAWING CONTAINS INFORMATION THAT IS PROPRIETARY TO XINFENGLEI ELECTRONIC CO.,LTD.AND SHOULD NOT BE USED WITHOUT WRITTEN PERMISSION

由 Autodesk 教育版产品制作