RoHS 客户图

目錄 MAPX	设变内容 MODIFICATION	日期 DATE
A0	NEW	19-10-20

MECHANICAL:

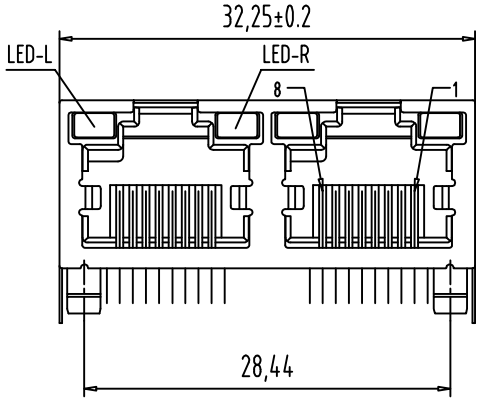

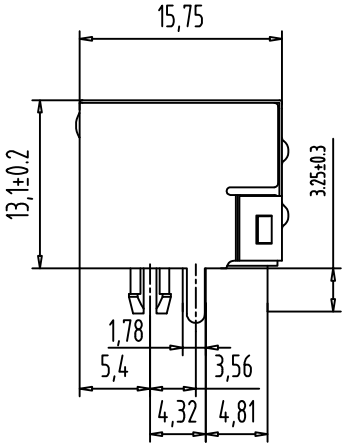

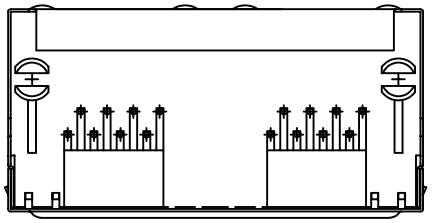

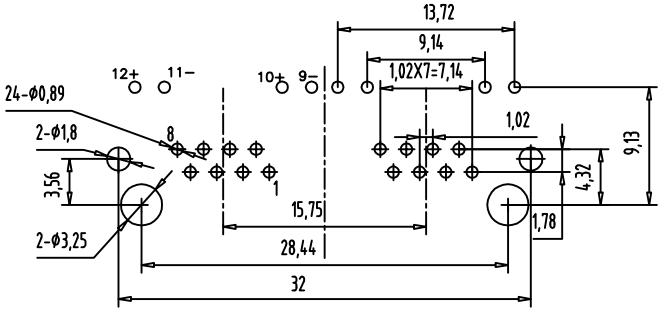

SPECIFICATION NOTES:

ELECTRICAL:

1. VOLTAGE RATING: 125 VAC RMS
2. CURRENT RATING: 1.5 AMP
3. CONTACT RESISTANCE: 30mΩ MAX.
4. INSULATION RESISTANCE: 500MΩMIN. AT
5. DIELECTRIC STRENGTH: 1000 VAC 50Hz 1MINUTE

MECHANICAL:

1. HOUSING/INSERT MATERIAL:
   THERMOPLASTIC, PBT UL94V-0,COLOR BLACK
2. CONTACT MATERIAL:PHOSPHOR BRONZE Φ0.46
3. PLATING:GOLD PLATING OVER NICKEL, PLATED NICKEL 80-100U". GOLD PLATED ON CONTENT AREA FU/3U/6U/15U/30U"
4. OPERATING LIFE:750 CYCLES MIN.

ENVIRONMENTAL:

1. STORAGE: -40° C TO +85° C
2. OPERATION: -40° C TO +85° C

PART NO.: 8025F-0000022-X

SERISE: RJ
Receptacle
serial number
Variabler

Standard LED	Wavelength	Forward v (Min/Max)	Forward A	Type	LED ELECTRICAL CHARACTERISTIC
Green	568nm	1.8V/2.8V	20mA	squareness	Yellow 12 11 LEFT LED; Green 10 9 RIGHT LED
Yellow	585nm	1.8V/2.8V	20mA	squareness	
Orange	610nm	1.8V/2.8V	20mA	squareness	

产品图 PRODUCT CHART DWG

公差一览表 TOLERANCE UNLESS OTHERWISE

X.	±0.30	X°.	±5°
.X	±0.25	.X°	±2°
.XX	±0.20	.XX°	±1°
.XXX	±0.15	.XXX°	±0.5°

深圳市鑫风雷电子有限公司
Shenzhen xinfenglei Electronics Co., Ltd

单位 UNITS	MM	制图 DRAWING	王冠 Wangguan	产品料号 PRODUCT PART NO.	8025F-0000022-X
比例 SCALE	1:1	审核 CHKD	雷永健 Leiyongjian	产品名称 PRODUCT NO.	RJ45母座 90度 DIP (圆针) 1x2 带灯无弹 H=13.1
日期 DATE	2009/10/20	核准 APPD	雷永健 Leiyongjian	联系方式 Mailbox/web	mailbox: sale1@xflconn.com www.xflconn.com

THIS DRAWING CONTAINS INFORMATION THAT IS PROPRIETARY TO XINFENGLEI ELECTRONIC CO.,LTD.AND SHOULD NOT BE USED WITHOUT WRITTEN PERMISSION

由 Autodesk 教育版产品制作