RoHS 客户图

目錄 MAPX	设变内容 MODIFICATION	日期 DATE
A0	NEW	09-10-20

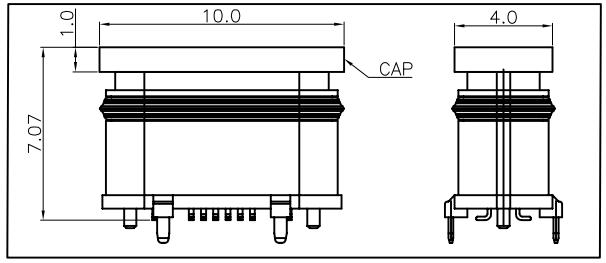

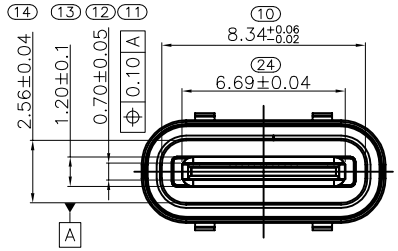

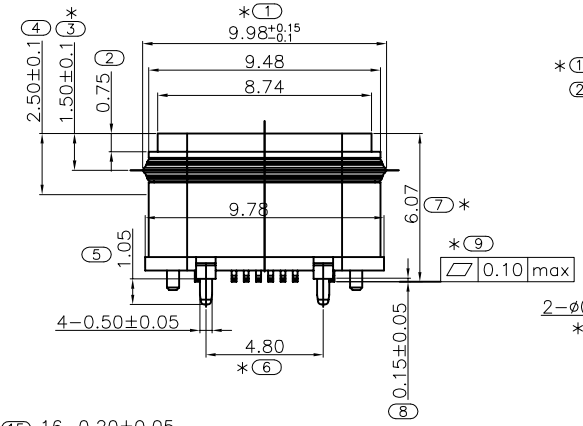

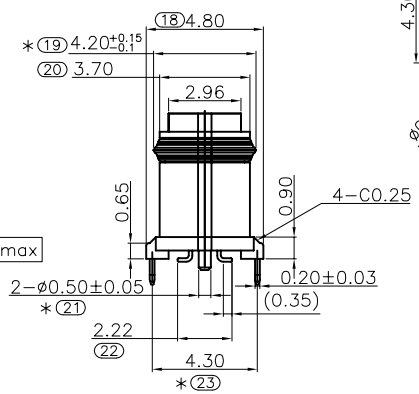

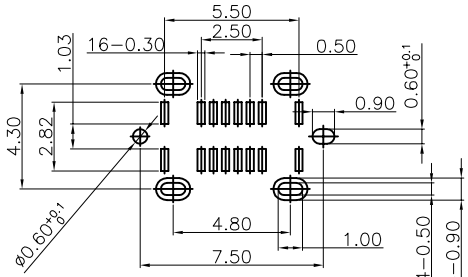

RECOMMENDED P.C.B LAYOUT
tolerance unspecification +/-0.05mm

NOTE:
1. ELECTRICAL CHARACTERISTICS;
   1-1 CURRENT RATING: 5A For Pin(A4,A9,B4,B9)
   1.25A For Pin(B5)
   0.25A For Others Pin.
   1-2 VOLTAGE RATING: DC 20V;
   1-3 CONTACT RESISTANCE: 40mΩ Max.
   1-4 INSULATION RESISTANCE: 100MΩ Min. AT DC 500V;
   1-5 WITHSTANDING VOLTAGE: AC 100V FOR 1 MINUTE,LEAKAGE CURRENT VALUE 0.5mA Max.
2. MECHANICAL CHARACTERISTICS:
   2-1 DURABILITY TEST:10000 CYCLES;
   2-2 MATING FORCE:
   BEFORE THE TEST:5~20 N.
   AFTER THE TEST:5~20 N
   UNMATING FORCE:
   BEFORE THE TEST:8~20 N.
   AFTER THE TEST:6~20 N
3. TEMPERATURE RANGE: -25 °C ~ 85 °C
4. WATERPROOF LEVEL: IPX7
5. Salt Spray Test: 72H
6. Dimensions with ⬭ are FAI Dimensions which should be measured and meet the spec during initial approval. Dimensions with ⬭ & * are SPC Dimensions which should be measured and meet the spec all the time.

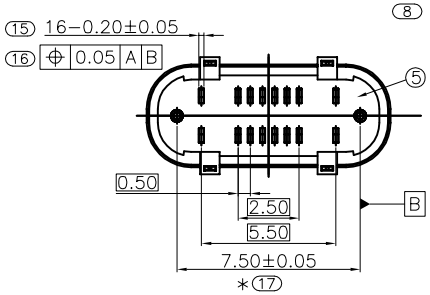

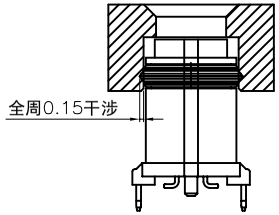

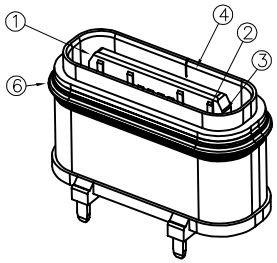

A1	A2	A3	A4	A5	A6	A7	A8	A9	A10	A11	A12
GND			VBUS	CC1	D+	D-	SBU1	VBUS			GND
GND			VBUS	SBU2	D-	D+	CC2	VBUS			GND
B12	B11	B10	B9	B8	B7	B6	B5	B4	B3	B2	B1

NO.	DESCRIPTION	MATERIAL	REMARKS	QTY.
6	O-RING	silicone	Red	1
5	Waterproof glue	epoxy glue	Black	1
4	SHELL	SUS304 T=0.20mm	Ni 50u" Min.	1
3	SHIELDING PLATE	SUS301 T=0.15mm	N/A	1
2	CONTACT	COPPER ALLOY T=0.15	Mating area: 15u'Au Solder Tails: 1u'Au Underplate: 80u"Min.Ni plated all over	16
1	INSERT MOLDING	HIGH TEMPERATURE MATERIAL	Black	1

产品图
PRODUCT CHART DWG

公差一览表
TOLERANCE UNLESS OTHERWISE

X.	±0.30	X°.	±5°
.X	±0.25	.X°	±2°
.XX	±0.20	.XX°	±1°
.XXX	±0.15	.XXX°	±0.5°

深圳市鑫风雷电子有限公司
Shenzhen xinfenglei Electronics Co., Ltd

单位 UNITS	MM	制图 DRAWING	王冠 Wangguan	产品料号 PRODUCT PART NO.	19021-UCAF001-X
比例 SCALE	1:1	审核 CHKD	雷永健 Leiyongjian	产品名称 PRODUCT NO.	Type C 16p立式SMT防水 H=6.07
日期 DATE	2009/10/20	核准 APPD	雷永健 Leiyongjian	联系方式 Mailbox/web	mailbox: sale1@xflconn.com www.xflconn.com

THIS DRAWING IS PROPRIETARY TO XINFENGLEI ELECTRONIC CO.,LTD.AND SHOULD NOT BE USED WITHOUT WRITTEN PERMISSION

由 Autodesk 教育版产品制作